Item # _____

Quantity _____

Mobile Self-Leveling Cabinets

Heated - Stainless Steel

Model 6306

Easy Field Adjustment For Plate Dispensing Height Without Tools.

- All-welded stainless steel construction.
- Corner bumpers protect cabinet, furniture, and doors.
- Each heated dispenser features its own thermostatic control.
- Easy-Glide™ design provides quiet, non-stick operation.
- 4” Lake-Glide® casters - all swivel, 2 with brake, extra-load.

Spec. # _____

AIA # _____

Specifications

Mobile Cabinet: Mobile cabinets shall be of all-welded stainless steel construction. Cabinets shall have 18-gauge top and 20-gauge sides and bottom and shall include bottom corner bumpers. Cabinet bottom shall have center clean out hole. Casters shall be 4” (102 mm) diameter extra-load swivel (two with locking brake). Unit shall feature a heavy-duty independent undercarriage frame of galvanized steel to which casters shall be mounted. Units shall be NSF listed.

Dispenser Tubes: Dispenser tubes shall be of welded stainless steel construction and shall drop into mobile cabinet top openings. Dispensers shall hang from cabinet opening by an 18-gauge flange ring, and feature three each 22-gauge vertical side supports welded to 20-gauge bottom plate. Self-leveling dish carriage shall be of welded stainless steel construction and shall travel vertically in dispenser tube with nylon guides for smooth operation. Carriage shall have 22-gauge removable dish platform. Dispensers shall feature flange mounted perimeter extension springs, which are detachable from the dish carriage, to provide adjustment without tools for different weight dishes. Each dispenser shall have a vertical stacking capacity of 25” (635 mm).

Heating Unit: Unit shall be 120 VAC 60 Hz and shall have 6’ (1829 mm) coiled power supply cord with L5-15P NEMA plug (L5-20P on Models 6409 and 6410) for 120 VAC. Cabinet shall have interior mounted electrical junction box with twist-lock receptacles for individual power to each dispenser. Dispenser tubes shall be fully enclosed in 22-gauge stainless steel, and have a circular bottom mounted 300 or 450 watt heater element to provide convection heat. Heating system shall feature thermostatic control in a tamper protective location with safe high-end shut off. Control shall have Infinite settings between low and high temperature cut-outs. Thermostat shall be field adjustable for average interior air temperature between 100° F (38° C) and 175° F (79° C) at middle adjustable thermostatic setting. On-off switch and power indicator light shall be mounted on top flange of dispenser. Average dish temperature rise of 40° F (22° C) above ambient shall be achieved within one hour of initial heating cycle at middle adjustable thermostatic setting. Cabinet and dispenser tubes shall be
UL listed.

LAKESIDE

Lakeside Manufacturing, Inc.
4900 West Electric Avenue • West Milwaukee, WI 53219 U.S.A.
800-558-8565 • 414-902-6400 • Fax 414-902-6446 • www.eLakeside.com

Lit# 1105 SLCRH

Lakeside reserves the right to modify specifications or discontinue models without prior notification.

Printed in the U.S.A.

Mobile Self-Leveling Cabinets

Heated - Stainless Steel

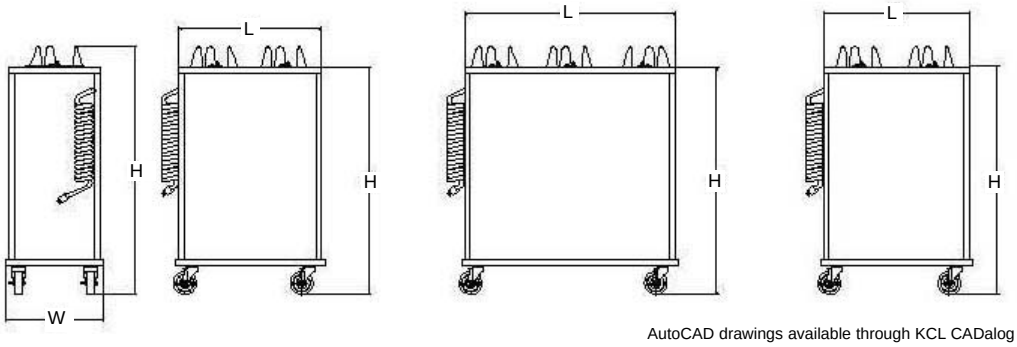

AutoCAD drawings available through KCL CADalog

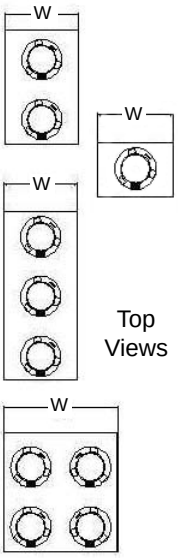

Top Views

AIA #

Spec. #

Dimensions

Single Stack Models

Model	Accommodates Plate Size	Dimensions W	Dimensions L	Dimensions H	Electrical Watts	Electrical Amps	Ship Weight
6100	Up to 5" (127)	18½" (470	22½" 571	40" 1013)	300	2.5	93 (42.1 kg)
6105	5-7/8" to 6-1/2" (149 to 165)	18½" (470	22½" 571	40" 1013)	300	2.5	93 (42.1 kg)
6106	5-7/8" to 6-1/2" (149 to 165)	18½" (470	22½" 571	40" 1013)	300	2.5	95 (42.8 kg)
6107	6-5/8" to 7-1/4" (168 to 184)	18½" (470	22½" 571	40" 1013)	300	2.5	98 (44.1 kg)
6108	7-3/8" to 8-1/8" (187 to 206)	18½" (470	22½" 571	40" 1013)	300	2.5	105 (47.3 kg)
6109	8-1/4" to 9-1/8" (210 to 232)	18½" (470	22½" 571	40" 1013)	450	3.75	110 (49.5 kg)
6110	9-1/4" to 10-1/8" (235 to 257)	18½" (470	22½" 571	40" 1013)	450	3.75	115 (51.8 kg)
6112	10-1/4" to 12-1/4" (260 to 311)	18½" (470	22½" 571	40" 1013)	450	3.75	122 (55.0 kg)

Two Stack Models

Model	Accommodates Plate Size	Dimensions W	Dimensions L	Dimensions H	Electrical Watts	Electrical Amps	Ship Weight
6200	Up to 5" (127)	18½" (470	32" 813	40" 1013)	600	5.0	100 (45.2 kg)
6205	5-7/8" to 6-1/2" (149 to 165)	18½" (470	32" 813	40" 1013)	600	5.0	100 (45.2 kg)
6206	5-7/8" to 6-1/2" (149 to 165)	18½" (470	32" 813	40" 1013)	600	5.0	103 (46.7 kg)
6207	6-5/8" to 7-1/4" (168 to 184)	18½" (470	32" 813	40" 1013)	600	5.0	106 (48.1 kg)
6208	7-3/8" to 8-1/8" (187 to 206)	18½" (470	32" 813	40" 1013)	600	5.0	117 (53.1 kg)
6209	8-1/4" to 9-1/8" (210 to 232)	18½" (470	32" 813	40" 1013)	900	7.5	121 (54.9 kg)
6210	9-1/4" to 10-1/8" (235 to 257)	18½" (470	32" 813	40" 1013)	900	7.5	125 (56.9 kg)
6212	10-1/4" to 12-1/4" (260 to 311)	20¾ (527	36½" 927	40" 1013)	900	7.5	138 (62.6 kg)

Three Stack Models

Model	Accommodates Plate Size	Dimensions W	Dimensions L	Dimensions H	Electrical Watts	Electrical Amps	Ship Weight
6300	Up to 5" (127)	18½" (470	46½" 1178	40" 1013)	900	7.5	171 (77.4 kg)
6305	5-7/8" to 6-1/2" (149 to 165)	18½" (470	46½" 1178	40" 1013)	900	7.5	171 (77.4 kg)
6306	5-7/8" to 6-1/2" (149 to 165)	18½" (470	46½" 1178	40" 1013)	900	7.5	176 (80.0 kg)
6307	6-5/8" to 7-1/4" (168 to 184)	18½" (470	46½" 1178	40" 1013)	900	7.5	180 (81.8 kg)
6308	7-3/8" to 8-1/8" (187 to 206)	18½" (470	46½" 1178	40" 1013)	900	7.5	192 (87.3 kg)
6309	8-1/4" to 9-1/8" (210 to 232)	18½" (470	46½" 1178	40" 1013)	1350	11.3	169 (89.1 kg)
6310	9-1/4" to 10-1/8" (235 to 257)	18½" (470	46½" 1178	40" 1013)	1350	11.3	200 (90.9 kg)

Four Stack Models

Model	Accommodates Plate Size	Dimensions W	Dimensions L	Dimensions H	Electrical Watts	Electrical Amps	Ship Weight
6400	Up to 5" (127)	32" (813	32" 813	40" 1013)	1200	10.0	188 (85.4 kg)
6405	5-7/8" to 6-1/2" (149 to 165)	32" (813	32" 813	40" 1013)	1200	10.0	188 (85.4 kg)
6406	5-7/8" to 6-1/2" (149 to 165)	32" (813	32" 813	40" 1013)	1200	10.0	192 (87.3 kg)
6407	6-5/8" to 7-1/4" (168 to 184)	32" (813	32" 813	40" 1013)	1200	10.0	193 (87.4 kg)
6408	7-3/8" to 8-1/8" (187 to 206)	32" (813	32" 813	40" 1013)	1200	10.1	220 (100.0 kg)
6409	8-1/4" to 9-1/8" (210 to 232)	32" (813	32" 813	40" 1013)	1800	15.0	222 (100.1 kg)
6410	9-1/4" to 10-1/8" (235 to 257)	32" (813	32" 813	40" 1013)	1800	15.0	225 (102.3 kg)

Measurements in ( ) denote metric millimeters, unless otherwise specified.

Optional Accessories

- Stainless steel dispenser covers
- 208/240 VAC 60Hz
- 220 VAC 50Hz
- Bottom perimeter bumper
- 8" (203 mm) vertical one-piece push handle (not available on four stack models)

LAKESIDE

Lakeside Manufacturing, Inc.
4900 West Electric Avenue • West Milwaukee, WI 53219 U.S.A.
800-558-8565 • 414-902-6400 • Fax 414-902-6446 • www.eLakeside.com

Lit# 1105 SLCRH

Lakeside reserves the right to modify specifications or discontinue models without prior notification.

Printed in the U.S.A.