ITEM NO. _____

COMBITHERM® COMBIoven™

20•20ES COMBItouch™

MODEL 20•20ES WITH COMBITOUCH CONTROL
ROLL-IN PAN CART INCLUDED
CAPACITY OF FORTY (40) FULL-SIZE OR GN 1/1 PANS,
TWENTY (20) FULL-SIZE SHEET OR GN 2/1 PANS

ecosmart™

- Intuitive CombiTouch control is fully operable from the touch screen.
- Store up to 250 recipes, each with up to 9 steps. CombiTouch comes standard with more than 100 preprogrammed recipes and photos.
- Multi-shelf Timers track cooking time of ten different food items in the same oven.
- Gold-n-Brown™ — Six precise and consistent browning levels are available with the CombiTouch. The exclusive Gold-n-Brown feature gives the operator the ability to achieve the ideal cooking environment for the ideal finish.
- EcoSmart™ design uses less electricity and water than competitive models. CombiTouch features a Reduced Energy setting, which further minimizes electricity use.
- The CombiTouch advanced reversing fan design provides excellent baking results and prevents excessive water and power consumption.
- Cook with the included product temperature probe or by time.
- Cooks with variable steam, convection heat, or a combination of both to roast, steam, bake, or oven-fry. Cooking speeds are increased by as much as 70% compared to conventional cooking methods.
- CombiClean™ feature uses scrubbing jets of water for fully automated cleaning. Use either commercial-strength CombiClean Tablets or Combitherm Cleaning Liquid Spray.

SHORT FORM SPECIFICATIONS:

Provide Alto-Shaam Combitherm® floor standing Model 20•20ES electric CombiOven™ designed with EcoSmart™ technology for reduced energy and water usage and include operational modes for steam, convection, and a combination of steam and convection heat. Standard features to include patented automatic steam venting; Gold-n-Brown™ browning function with a choice of six different levels; two-speed reversing fan with coordinated venting system, two individual USB ports for data access, and a self-adjusting, flush-mounted rotary door handle with a steam venting safety stop. Oven is to be constructed of 18 gauge stainless steel, include an attached spray hose with backflow preventer, quick-connect single-point internal product temperature probe in the oven interior, cool-down function, and automated cleaning function, and automatic decalcification. Each oven is to accommodate up to 20 full-size sheet pans or 40 full-size hotel pans, include standard right-hand door hinging and Roll-in pan cart with removable drip tray and cart handle.

CombiTouch™ Control: Touch sensitive, graphics based control to include more than 100 preprogrammed recipes and photos, programming capability for up to 250 recipes - each with up to 9 steps, ten multi-shelf timers, and on-board diagnostics.

c UL us LISTED
COOKING APPLIANCE
584m

CLASSIFIED UL EPH
ANSI/NSF 4

CE

STANDARD FEATURES AND ACCESSORIES

- Roll-in pan cart completely interchangeable with QC-100 QuickChiller™ and 20•20 CombiMate® companion holding cabinet with:
  Twenty (20) non-tilt pan support rails
  21-1/8" (537mm) horizontal width between rails
  2-5/8" (67mm) vertical spacing between rails
  Ten (10) stainless steel wire shelves
  Removable drip tray and cart handle
- Four (4) 6" (152mm) adjustable legs
- One (1) hand-held shower with backflow preventer PATENT PENDING
- One (1) flush-mounted rotary door latch with steam venting position
- Single-point detachable temperature probe

ALTO-SHAAM®
W164 N9221 Water Street • P.O. Box 450 • Menomonee Falls, Wisconsin 53052-0450 • U.S.A.
PHONE: 262.251.3800 800.558.8744 U.S.A./CANADA FAX: 262.251.7067 800.329.8744 U.S.A. ONLY
www.alto-shaam.com

PRINTED IN U.S.A.

DUE TO ONGOING PRODUCT IMPROVEMENT, SPECIFICATIONS ARE SUBJECT TO CHANGE WITHOUT NOTICE.

#455A - 04/10

ALTO-SHAAM

20•20ES

COMBItouch™

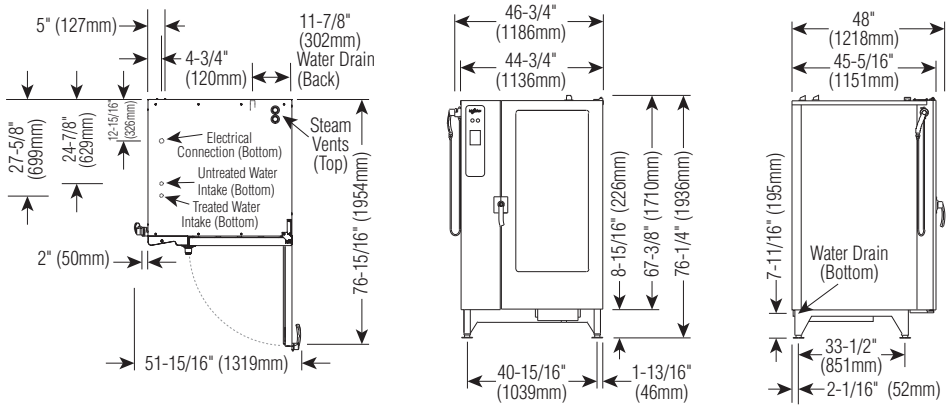

DIMENSIONS: H x W x D

EXTERIOR:
76-1/4" x 46-3/4" x 48" (1936mm x 1186mm x 1218mm)

EXTERIOR WITH RECESSED DOOR:
76-1/4" x 50-3/4" x 48" (1936mm x 1288mm x 1218mm)

INTERIOR:
60-1/4" x 26-1/4" x 32-11/16" (1530mm x 667mm x 830mm)

INSTALLATION REQUIREMENTS

Oven must be installed level.

Hood installation is required.

Water supply shut-off valve and back-flow preventer.

WATER REQUIREMENTS

TWO (2) COLD WATER INLETS - DRINKING QUALITY

ONE (1) TREATED WATER INLET:	3/4" NPT*	* Can manifold off of one 3/4" line.
ONE (1) UNTREATED WATER INLET:	3/4" NPT*	
LINE PRESSURE:	30 to 90 psi	2.8 to 6.2 bar

WATER DRAIN: 1-1/2" CONNECTION WITH A 2" MINIMUM AIR GAP INSTALLED AS CLOSE TO THE OVEN AS POSSIBLE

WATER QUALITY MINIMUM STANDARDS

USING A WATER SUPPLY NOT MEETING ALTO-SHAAM'S MINIMUM WATER QUALITY STANDARDS WILL VOID THIS WARRANTY. It is the responsibility of the purchaser to ensure that incoming water supply is compliant with the specifications listed through adequate treatment measures. Installation of the CombiGuard™ Water Filtration System is recommended, but this system may not address all water quality issues present.

Contaminant	Inlet Water Requirements (untreated water)
Free Chlorine	Less than 0.1 ppm (mg/L)
Hardness	Less than 3 gpg (52 ppm)
Chloride	Less than 30 ppm (mg/L)
pH	7.0 to 8.5
Alkalinity	Less than 50 ppm (mg/L)
Silica	Less than 12 ppm (mg/L)
Total Dissolved Solids (tds)	Less than 60 ppm

CLEARANCE REQUIREMENTS

LEFT: 6" (152mm) RECOMMENDED SERVICE ACCESS: 18" (457mm)
20" (508mm) FROM HEAT PRODUCING EQUIPMENT

RIGHT: 4" (102mm) TOP: 20" (508mm) FOR AIR MOVEMENT

BACK: 4" (102mm) BOTTOM: 5-1/8" (130mm) FOR LEGS

ELECTRICAL (DEDICATED CIRCUIT REQUIRED)

	VOLTAGE	PHASE	CYCLE/HZ	AWG	AMPS	kW
208-240	at 208	3	50/60	3 Wire plus ground	151.2/ph	54.4
	at 240			AWG 4	173.9/ph	72.2
380-415	at 380	3	50/60	4 Wire plus ground	83.0/ph	54.4
	at 415			AWG 2	101.0/ph	72.2
440-480	at 440	3*	50/60	3 Wire plus ground	71.5/ph	54.4
	at 480			AWG 2	87.0/ph	72.2

* ELECTRICAL SERVICE CHARGE APPLIES

WEIGHT

NET	958 lb.	(435 kg)
SHIP	1364 lb	(619 kg)

CRATE DIMENSIONS: (L X W X H) EST
53" x 53" x 87"
(1346 x 1346 x 2210mm)

CAPACITY

FULL-SIZE PANS:	20" x 12" x 2-1/2"	Forty (40)
GN 1/1:	530 x 325 x 65mm	Forty (40)
GN 2/1:	650 x 530 x 65mm	Twenty (20)
FULL-SIZE SHEET PANS:* ON WIRE SHELVES ONLY	18" x 26" x 1"	Twenty (20)

480 lb (218 kg) MAXIMUM

VOLUME MAXIMUM: 300 quarts (380 liters)

*ADDITIONAL WIRE SHELVES REQUIRED FOR MAXIMUM CAPACITY

DUE TO ONGOING PRODUCT IMPROVEMENT, SPECIFICATIONS ARE SUBJECT TO CHANGE WITHOUT NOTICE.

COMBITHERM®

20•20ES

Cooking

Recipe

Gold-n-Brown

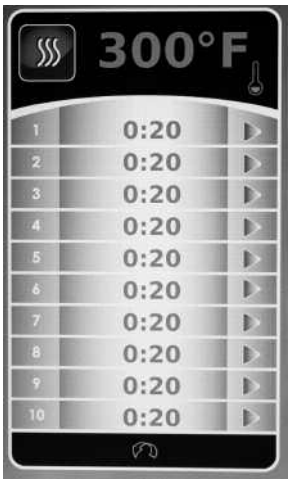

Multi-Shelf Timer

Steam Mode
- Automatic steaming at 212°F (100°C).
- Quick steaming 213°F to 250°F (101°C to 121°C).
- Low temperature steaming between 85°F and 211°F (29°C and 99°C) – for poaching or proofing.

Combination Mode
- Combines steam and convection modes for faster production and better moisture retention.
- Improves yield, quality and shelf life.
- Automatic humidity control.
- Temperature range of 212°F to 485°F (100°C to 252°C).

Convection Mode
- Cooking, roasting, baking and finishing applications at a temperature range of 85°F to 485°F (29°C to 252°C).

Retherm Mode
- Bulk food or plated meal reheating with automatic steam injection.
- Automatic humidity control.
- Temperature range of 245°F to 320°F (118°C to 160°C).

Gold-n-Brown™
- Six levels of Gold-n-Brown are featured. Gold-n-Brown vents just the right amount of humidity in the oven cavity for perfect browning.

Moisture Injection
- A quick burst of moisture can be added with a touch of a button at any time when cooking in the convection mode.

HACCP Data Access
- CombiTouch models records cooking mode, time and temperature completed within a two week time period. The information is captured in a text format and can be downloaded to a USB device.

Factory Installed Options:
(may require additional lead time)

☐ **Recessed Door - Right Hinging**
Increases oven width by 4" (102mm)

☐ **Multi-point, hard-wired internal product temperature probe** [5005678]

☐ **Security Devices** for correctional facility use.
Excludes temperature probe.

Additional Security Options
- ☐ Anti Entrapment Device [5011081]
- ☐ Control Panel Security Cover [5011080]
- ☐ Hasp Door Lock (padlocks not included) [5011079]
- ☐ Seismic Leg Package (for bolting to the countertop) [5011135]
- ☐ Tamper-Proof Screw Package for oven [5011082]

DUE TO ONGOING PRODUCT IMPROVEMENT, SPECIFICATIONS ARE SUBJECT TO CHANGE WITHOUT NOTICE.

COMBITHERM®
COMBIoven™

20•20ES
COMBItouch™

OPTIONS & ACCESSORIES	
☐ **CHICKEN GREASE TRAY** WITH DRAIN: 1-1/2" (38mm) DEEP	4758
☐ **CHICKEN GREASE TRAY** WITH DRAIN: 2-3/4" (70mm) DEEP	14475
CHICKEN ROASTING RACKS:	
☐ 6 CHICKEN CAPACITY — FITS FULL-SIZE PAN: 10 RACKS PER OVEN	SH-23000
☐ 8 CHICKEN CAPACITY — FITS FULL-SIZE PAN: 12 RACKS PER OVEN	SH-23619
☐ 10 CHICKEN CAPACITY — FITS IN SIDE RACKS: 12 RACKS PER OVEN	SH-22634
☐ **COMBIGUARD™ BWS BLENDED WATER SYSTEM** (INCLUDES 50 GALLON TANK, 1 MEMBRANE & 3 FILTERS)	FI-28727
☐ **COMBIGUARD™ BWS REPLACEMENT FILTER CARTRIDGE AMS-QT**	FI-29316
☐ **COMBIGUARD™ BWS REPLACEMENT FILTER CARTRIDGE SCLX2-Q**	FI-29317
☐ **COMBIGUARD™ BWS REPLACEMENT PREFILTER FILTER CARTRIDGE CTO-Q**	FI-29318
☐ **COMBIGUARD™ 20 TRIPLE-GUARD WATER FILTRATION SYSTEM** (INCLUDES 1 CARTRIDGE)	FI-28728
☐ **COMBIGUARD™ 20 TRIPLE-GUARD REPLACEMENT FILTER**	FI-28744
☐ **COMBITHERM CLEANING LIQUID** — SPECIALLY FORMULATED FOR COMBITHERM OVENS ➥ TWELVE (12) CONTAINERS/CASE, 1 QUART (C. 1 LITER) EACH [SPECIAL HANDLING REQUIRED]	CE-24750
☐ **COMBICLEAN™ TABLETS** — SPECIALLY FORMULATED FOR COMBITHERM OVENS ➥ 90 PACKETS EACH CONTAINER - MUST BE ORDERED IN EVEN QUANTITIES OF TWO (2)	CE-28892
☐ **EXTENDED ONE-YEAR WARRANTY**	CONTACT FACTORY
☐ **FRY BASKET,** 12" X 20" (325mm x 530mm)	BS-26730
☐ **GRILLING GRATE,** 12" X 20" (325mm x 530mm)	SH-26731
☐ **PREHEAT SEALING STRIP** (TO PREHEAT RIGHT HAND UNITS WITHOUT ROLL-IN TROLLEY)	1010739
☐ **PREHEAT SEALING STRIP** (TO PREHEAT RECESSED DOOR UNITS WITHOUT ROLL-IN TROLLEY)	1010752
☐ **PROBE, SOUS VIDE**	PR-34747
☐ **ROLL-IN PAN CART:** (H X W X D): 66-1/16" x 28-1/8" x 35-3/16" (1678mm x 714mm x 892mm) INTERCHANGEABLE WITH 20•20 COMBIMATE HOLDING CABINET AND QC-100 QUICKCHILLER	UN-27970
☐ **ROLL-IN PAN CART — SECURITY OPTION:** INCLUDES TAMPER-PROOF SCREWS AND WELDED HANDLE (H X W X D): 66-1/16" x 28-1/8" x 35-3/16" (1678mm x 714mm x 892mm) INTERCHANGEABLE WITH 20•20 COMBIMATE HOLDING CABINET AND QC-100 QUICKCHILLER	5010642
ROLL-IN PLATE CART: INTERCHANGEABLE WITH 20•20 COMBIMATE HOLDING CABINET AND QC-100 QUICKCHILLER	
☐ 78 PLATE CAPACITY – (H X W X D): 65-1/2" x 30-5/16" x 39-9/16" (1663mm x 770mm x 1004mm) PLATE SIZE 10" TO 12" DIAMETER (254mm TO 305mm) PLATES; 3-1/2" (89mm) SPACING	UN-28311
☐ 108 PLATE CAPACITY – (H X W X D): 65-15/16" x 28-1/8" x 39-13/16" (1673mm x 714mm x 1011mm) PLATE SIZE 10" TO 12" DIAMETER (254mm TO 305mm) PLATES; 2-11/16: (69mm) SPACING	UN-27971
☐ 108 PLATE CAPACITY – SECURITY OPTION (H X W X D): 65-15/16" x 28-1/8" x 39-13/16" (1673mm x 714mm x 1011mm) PLATE SIZE 10" TO 12" DIAMETER (254mm TO 305mm) PLATES; 2-11/16: (69mm) SPACING	5009899
☐ **SCALE FREE™** (CITRUS BASED, NON-CORROSIVE DELIMING PRODUCT)	CE-27889
☐ **SERVICE START-UP CHECK** AVAILABLE THROUGH AN ALTO-SHAAM FASTEAM CENTER	SPECIFY AS REQUIRED
☐ **SHELF, STAINLESS STEEL WIRE**	SH-22473

DUE TO ONGOING PRODUCT IMPROVEMENT, SPECIFICATIONS ARE SUBJECT TO CHANGE WITHOUT NOTICE.