randell™

FX SERIES

UNDERCOUNTER MODEL FX-1UC

Single undercounter refrigerated insert with finished top, on casters. The FX Series revolutionizes point of use refrigeration by allowing the operator to adjust the temperatures from -5°F (freezer) operation up to 40°F (refrigerator) or any setting in between utilizing its unique convertible refrigeration system. Using a patented technology that provides 100% in-drawer cooling, this ultra-efficient self-contained system provides precise temperature control without compromising operator flexibility.

PROJECT NAME:

LOCATION:

ITEM NO:

QTY:

MODEL NO:

AIA NO:

SIS NO:

CSI SECTION: 11400

STANDARD FEATURES:

- Convertible Refrigeration System (Refrigerator to Freezer)
- Point-of-use Size and Design
- Precise Temperature Control
- Patented In-drawer Cooling System
- Removable Insulated Drawer Compartment
- Ambient Drawer Track System
- Full-Extension Drawer System
- 100% Front Breathing
- Horizontal Gasket is Out of Harms Way

REFRIGERATION SYSTEM: The FX Series uses a patented in-drawer cooling system that directs 100% of the cooling inside the insulated and removable drawer Insert (see below). The evaporator coil is mounted horizontally above the drawer Insert with an integral gasket that seals against the insulated drawer compartment when closed. The refrigeration system operates only when the drawer is closed, efficiently managing the air-flow while reducing energy and humidity build-up. Press-fit removable gasket with magnet-to-magnet seal is standard.

DRAWER SYSTEM: The FX Series drawer system is the only full-extension, full product view, drawer system that has the drawer tracks outside the cooled compartment offering a more reliable, durable system not prone to the cold or debris environment common in traditional drawer systems. The full-extension tracks are constructed of corrosion resistant coated steel with a fully integrated support system. The drawer box and intermediate tracks are removable with simple tools and can only be reinstalled one-direction for proper fit. The drawer system has been tested with over 300,000 cycles without failure (90 pound test load per drawer).

REMOVABLE INSULATED INSERT: This exclusive design allows full removal of the refrigerated compartment for cleaning or pre-loading. Made of high impact ABS plastic with high density polyurethane insulation. Provides unparalleled insulation value with no air gaps.

TEMPERATURE STATEMENT: The unit is provided with a electronic temperature controller that can be easily adjusted by the operator to any temperature setting between -5°F (freezer) operation up to 40°F (refrigerator).

CABINET EXTERIOR: The cabinet exterior is high grade stainless steel where seen to allow long use and beauty while providing easy to maintain and clean surfaces.

CABINET BASE/INTERIOR: The cabinet interior is high grade stainless steel where seen to allow long use and beauty while providing easy to maintain and clean surfaces. Unit comes standard on recessed casters for rolling out to clean under.

ELECTRICAL: Standard 115 volt with NEMA 5-15 cord and plug.

ORIGIN OF MANUFACTURE: Designed and manufactured in the United States.

SHORT FORM: Single drawer undercounter unit with finished top, on casters. Model FX-1UC shown.

OPTIONS/ACCESSORIES:

- ☐ Recessed Handle(s)
- ☐ Poly Tub Divider
- ☐ Stainless Steel Tub Divider

randell™

FX-1UC

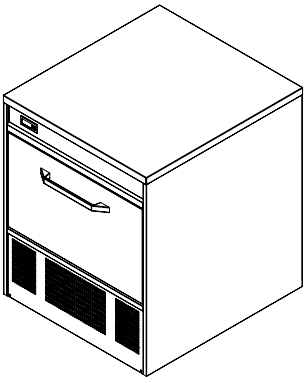

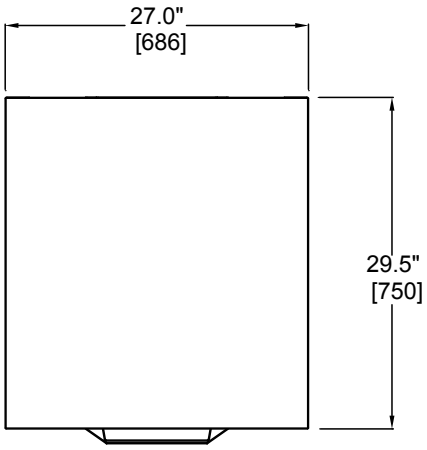

TOP VIEW

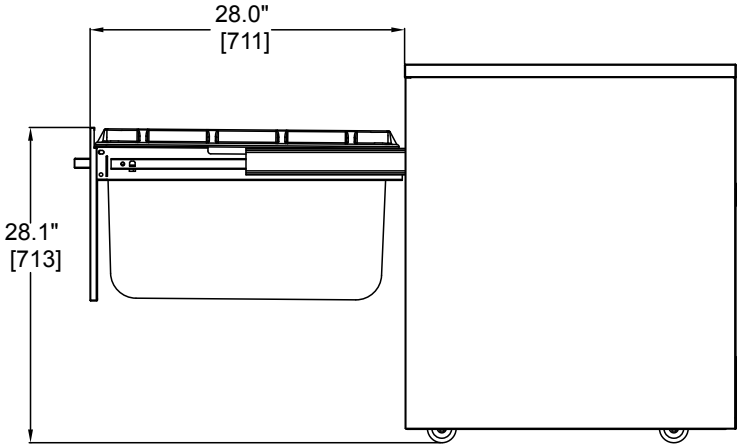

RIGHT SIDE VIEW DRAWER EXTENDED

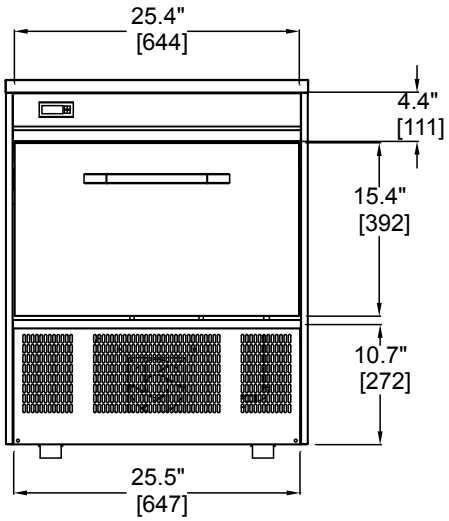

FRONT VIEW

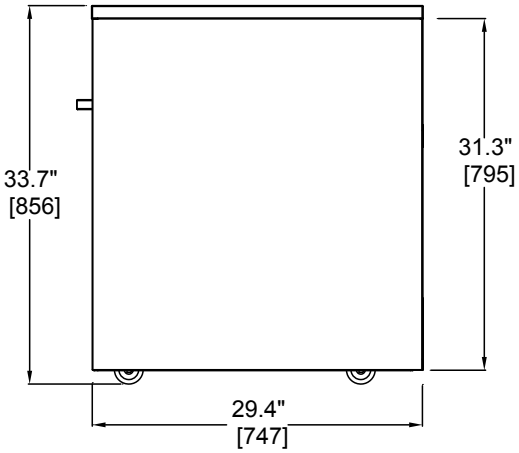

RIGHT SIDE VIEW

L	D	H	No. of Drawers	Storage (cubic feet)	Comp. Size	Amp Draw (actual)	Refrig. Power Usage (per day)	Freezer Power Usage (per day)	Volt	NEMA	Ship Weight (lbs)
27”	29.5”	33.7”	1	2.7	5.5cc	3.9	1.22kw	1.99kw	115	5-15p	422

unified brands™ A DOVER COMPANY

1055 Mendell Davis Drive, Jackson, MS 39272, 888-994-7636, unifiedbrands.net

© 2013 Unified Brands. All Rights Reserved. Unified Brands is a wholly-owned subsidiary of Dover Corporation.