CONVECTION OVEN
BRONZE
GAS, DOUBLE DECK

BGS/22SC

Job _____ Item# _____

Standard Features

- ENERGY STAR® qualified
- Patented, high efficiency, non-clog Inshot burners
- 54,000 BTU Per Oven Cavity (NAT or LP)
  -available in standard depth only
- Double deck convection oven is 66-1/2" in height
- Dependent doors with windows (Full 180° opening)
- Oven interior light
- Coved, porcelain interior
- Rugged double door with stainless steel door seals
- Heavy duty stainless steel door handle
- Soft Air, two-speed, 1/2 hp fan motor
- 11-position rack guides and 5 plated oven racks
- Electronic ignition
- Forced cool down fan mode
- Oven "ready" light

Available Control

SC-Standard Controls
140°F to 500°F solid state thermostat and 60 minute mechanical cook timer.

(shown with optional casters)

STANDARD CONSTRUCTION SPECIFICATIONS

Exterior Finish: Stainless steel front, sides and top.

Doors: Dependent doors with windows. Stainless steel construction, heavy-duty welded steel frame and 5/8" diameter full-length hinge pin.

Oven Interior: Coved porcelain enamel finish.

Rack and Rack Guides: Heavy-duty removable wire rack guides spaced on 1-5/8" centers offer 11 different rack positions. 5 wire racks provided with each oven.

Blower Fan and Motor: 1/2hp, 2-speed motor, 1710/1120 r.p.m

Oven Heating: 54,000 BTU (NAT or LP). Oven heating is regulated by an adjustable thermostat control. Blower fan circulates air within the cavity "scrubbing" heat to the oven interior for even heat distribution within the cavity.

Control Panel: Located on front, at right side of oven, away from heat zone. Removable panel opens downward for easy servicing.

Legs: 6" stainless steel legs standard.

Note: Oven cannot be operated without fan in operation.

Models: ☐**BGS/22SC**

Dimensions -in (mm)

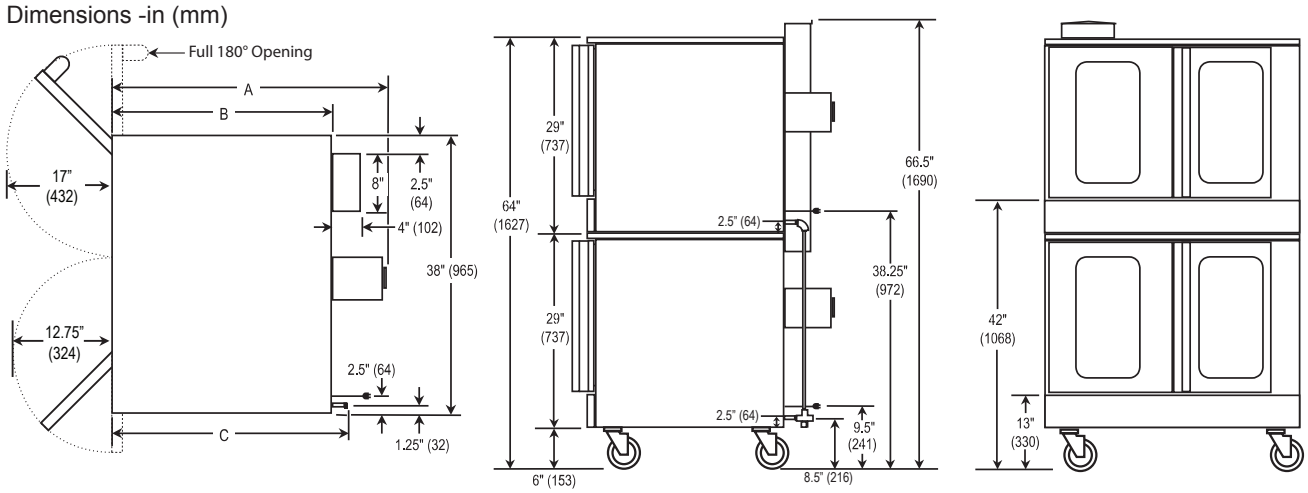

MODEL	Depth			Oven Interior			Rack Clearance		Shipping Crate				
	A	B	C	Width	Depth	Height	Width	Depth	Width	Depth	Height	Volume	Weight
BG/22SC	37" (940)	30" (763)	34.375" (874)	29" (737)	22.5" (572)	20" (508)	28.25" (718)	22" (559)	48" (1220)	57" (1448)	69" (1753)	109 cu. ft. (3.10 cu. m.)	1,040 lbs (471.7 kg.)

UTILITY INFORMATION

GAS:

- Standard Depth: 54,000 BTU per oven cavity (NAT or LP)
- One 3/4" male connection
- Required minimum inlet pressure:
  - Natural gas 7" W.C.
  - Propane gas 11" W.C.

ELECTRIC: Standard: 120/60/1 phase, furnished with 6' cord w/3-prong plug (1 plug/deck). NEMA #5-15p. Total maximum amps 7.9

* All units are shipped single phase.

MISCELLANEOUS

- If using flex hose connector, the I.D should not be smaller than 3/4" and must comply with ANSI Z 21.69.
- If casters are used with flex hose, a restraining device should be used to eliminate undue strain on the flex hose.
- Clearances from combustibles: Top-0", bottom-0", right side-0" and left-3"
- Install under vented hood
- Check local codes for fire and sanitary regulations
- If the unit is connected directly to the outside flue, an A.G.A approved down draft diverter must be installed at the flue outlet of the oven
- Oven cannot be operated without fan in operation

Notice: Southbend reserves the right to change specifications and product design without notice. Such revisions do not entitle the buyer to corresponding changes, improvements, additions, or replacements for previously purchased equipment.

OPTIONS AND ACCESSORIES

- ❑ Bolt-down flanged legs
- ❑ Swivel Caster - front with locks
- ❑ Export Crating
- ❑ Extra oven racks
- ❑ Knocked down packaging
- ❑ Down draft diverter for direct flue
- ❑ 3/4" quick disconnect with flexible hose (specify length: 3ft, 4ft, or 5ft)
- ❑ 2" air insulation panel (stainless steel only)

INTENDED FOR COMMERCIAL USE ONLY.
NOT FOR HOUSEHOLD USE.

1100 Old Honeycutt Road, Fuquay-Varina, NC 27526
(919) 762-1000 www.southbendnc.com