JETSTAR POPCORN POPPERS & CART

Models 39-A, 39D-A, 39R-A, 39S-A & JPC-4/6

Features/Benefits:

★ Several style and color options available to fit any decor:
- 39-A-***JetStar*** Popper with Yellow Painted Top
- 39D-A-***JetStar*** Popper with Wood-Grain Styling
- 39R-A-***JetStar*** Popper with Antique Styling
- 39S-A-***JetStar*** Popper with Stainless Steel Top

★ Pops 135 one ounce servings per hour of quality Star Chief's Choice brand popcorn.(Contact factory for details)

★ Fits almost anywhere requiring only 21" of counter space.

★ 6 oz. nickel plated steel kettle for maintenance free operation.

★ Swing up/down kettle design allows easy dispensing of your popped corn into the cabinet and is easy to clean.

★ A magnetic catch holds the one-piece kettle lid up for easy and safe loading of Chief's Choice popcorn.

★ Heated stainless steel corn deck to keep your popcorn fresh and crisp when you want to snack.

★ Stainless steel removable old maid drawer for easy separation and removal of unpopped kernels.

★ Three 1/8" thick clear tempered glass panels with aluminum corner posts for easy cleaning and excellent merchandising.

★ Two clear Lexan doors have full length aluminum hinges with magnetic catch to stand up to consistent use.

★ Clear Lexan serving drop panel provides great visibility and easy removal for cleaning.

★ Eye level control panel houses 2 switches; top (kettle mixer and kettle heat) and bottom (75 watt light to merchandise and bottom element to keep popcorn crisp and ready to eat.)

★ Attractive colorful graphics to enhance impulse sales.

★ Optional cart available, convert your counter top popper into a floor model creating mobility and easy access to popcorn.

Model 39R-A

Model 39R-A on JPC-4/6

Application:

The JetStar 6 oz. popcorn poppers are ideal for snack bars, convenience stores, taverns, restaurants or any place you want to pop delicious popcorn. Whether its a quick snack or an addition to a meal, JetStar commercial popcorn machines are built to last.

Quality Construction:

The 6 oz. JetStar family of popcorn poppers are outfitted with a nickel plated steel kettle, stainless steel exterior shell and a 1000 watt kettle heating element. Units are constructed of 1/8" thick tempered glass panels and four extruded aluminum corner posts. Units have two 3/16" thick Lexon doors with full length aluminum hinges and clear Lexan removable drop panel. Contains a 50 watt heated stainless steel corn deck and a stainless steel old maid drawer. A 6' cord and NEMA 5-15 Plug are standard.

Warranty:

JetStar 6oz poppers are covered by Star' s two year parts and labor warranty.

NSF

UL LISTED

Star Manufacturing International Inc. - 10 Sunnen Drive - P.O. Box 430129 - St. Louis, MO 63143-3800

Phone: (800) 264-7827 - FAX: (800) 264-6666 - www.star-mfg.com

Star Manufacturing International, Inc

JETSTAR POPCORN POPPERS & CART

Models 39-A, 39D-A, 39R-A, 39S-A & JPC-4/6

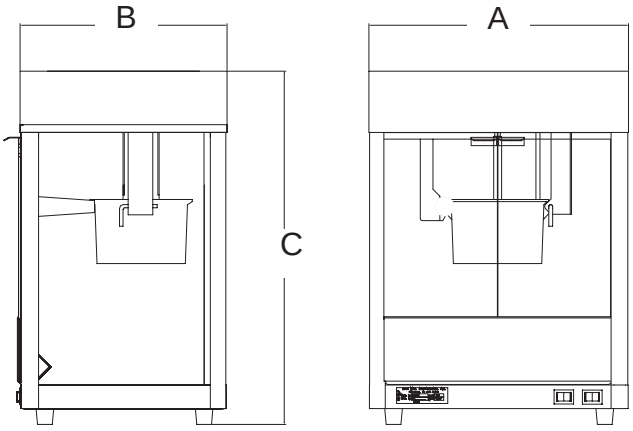

JetStar Poppers

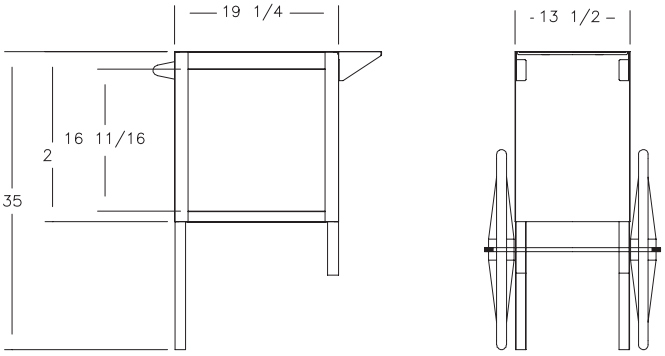

JPC-4/6 Cart

Specifications

Model No.	Serving Per Hour	Dimensions (A) Width Inches (cm)	(B) Depth Inches (cm)	(C) Height Inches (cm)	Approximate Weight Installed lbs. (kg)	Shipping lbs. (kg)
39-A - Yellow	135 - 1 oz.	19-1/2 (49.5)	14-1/4 (36.2)	25-1/8 (63.8)	45 (20.41)	56 (25.4)
39D-A - Wood Grain	135 - 1 Oz.	21 (53.3)	14-1/4 (36.2)	25-1/8 (63.8)	45 (20.41)	56 (25.4)
39R-A - Antique	135 - 1 Oz.	19-1/2 (49.5)	14-1/4 (36.2)	25-1/8 (63.8)	45 (20.41)	56 (25.4)
39S-A - Stainless Steel	135 - 1 Oz.	19-1/2 (49.5)	14-1/4 (36.2)	25-1/8 (63.8)	45 (20.41)	56 (25.4)

Electrical Data

Model No.	Voltage		Total Wattage	NEMA Plug 120V	230V
39-A - Yellow	120V	230V	1197	5-15P	CEE7-7
39D-A - Wood Grain	120V	230V	1197	5-15P	CEE7-7
39R-A - Antique	120V	230V	1197	5-15P	CEE7-7
39S-A - Stainless Steel	120V	230V	1197	5-15P	CEE7-7

Accessory

Model No.	Description	Dimensions Width Inches (cm)	Depth Inches (cm)	Height Inches (cm)	Shipping Weight Installed lbs. (kg)	Shipping lbs (kg)
JPC-4/6	Cart for 39 and J4R Popcorn Machines	13-1/2 (34.3)	19-1/4 (48.9)	35 (88.9)	42 (19.1)	50 (22.7)

Typical Specifications

Popcorn machines are constructed of extruded aluminum corner posts and 1/8" thick tempered glass panels. Unit is provided with two 3/16" thick plexiglass doors with full length aluminum hinges with magnetic door catch and clear lexan serving drop panel. Popcorn machines are supplied with a 1000 Watt, 6 oz. capacity nickel plated steel popping kettle with a stainless steel exterior shell. A wire cage protected 75 watt display lamp, 50 watt heated stainless steel corn deck, and stainless steel old maid drawer are provided. Optional cart available to convert your counter top popper into a floor model machine.A 6' cord and NEMA 5-15 plug for 120V, a 6-15P for 240V and CEE7-7 for 230V are standard. Poppers are approved by UL and NSF. Printed in the U.S.A.

Star Manufacturing International Inc. - 10 Sunnen Drive - P.O. Box 430129 - St. Louis, MO 63143-3800
Phone: (800) 264-7827 - FAX: (800) 264-6666 - www.star-mfg.com