**TRUE FOOD SERVICE EQUIPMENT, INC.**
2001 East Terra Lane • O'Fallon, Missouri 63366
(636)240-2400 • Fax (636)272-2408 • (800)325-6152 • Intl Fax# (001)636-272-7546
Parts Dept. (800)424-TRUE • Parts Dept. Fax# (636)272-9471 • www.truemfg.com

*Project Name:* _____
*Location:* _____
*Item #:* _____ *Qty:* _____
*Model #:* _____

*AIA #*
*SIS #*

Model:
**G4SM-23**

# Glass Four Sided Merchandiser:
*Swing Door Refrigerator*

## G4SM-23

- The world's #1 manufacturer of glass door merchandisers.
- Oversized, factory balanced, refrigeration system holds 33°F to 38°F (.5°C to 3.3°C).
- Exterior - attractive, high luster copper aluminum finish with black trim.
- Interior - attractive, NSF approved, white aluminum interior liner with 300 series stainless steel floor.
- Door is self closing with a positive seal, torsion type closure system.
- "Low-E", double pane thermal insulated glass in door assembly, sides and rear. The latest in energy efficient technology.
- Illuminated exterior front sign panel.
- Entire cabinet structure is foamed-in-place using Ecomate. A new, innovative, high density, polyurethane insulation that has zero ozone depletion potential (ODP) and zero global warming potential (GWP).

**Bottom mounted units feature**

- "No stoop" lower shelf to maximize product visibility.
- Storage on top of cabinet.
- Easily accessible condenser coil for cleaning.

## ROUGH-IN DATA

Specifications subject to change without notice.
Chart dimensions rounded up to the nearest ⅛" (millimeters rounded up to next whole number).

| Model | Doors | Shelves | Cabinet Dimensions (inches) (mm) L | D† | H | HP | Voltage | Amps | NEMA Config. | Cord Length (total ft.) (total m) | Crated Weight (lbs.) (kg) |
|---|---|---|---|---|---|---|---|---|---|---|---|
| G4SM-23 | 1 | 4 | 27½<br>699 | 30⅛<br>766 | 78⅝<br>1998 | ½<br>½ | 115/60/1<br>230-240/50/1 | 10<br>5.0 | 5-15P<br>▲ | 9<br>2.74 | 375<br>171 |

† Depth does not include 1⅛" (29 mm) for door handle.

▲ Plug type varies by country.

Printed in U.S.A.

*APPROVALS:*

*AVAILABLE AT:*

Model:

**G4SM-23**

# Glass Four Sided Merchandiser:

*Swing Door Refrigerator*

## STANDARD FEATURES

### DESIGN

- True's commitment to using the highest quality materials and oversized refrigeration systems provides the user with colder product temperatures, and lower utility costs in a stylish merchandiser that creates a dynamic 360°product display.

### REFRIGERATION SYSTEM

- Factory engineered, self-contained, capillary tube system using environmentally friendly (CFC free) 134A refrigerant.
- Extra large evaporator coil balanced with higher horsepower compressor and large condenser; maintains cabinet temperatures of 33°F to 38°F (.5°C to 3.3°C).
- Sealed, cast iron, self-lubricating evaporator fan motor(s) and larger fan blades give True merchandisers a more efficient low velocity, high volume airflow design. This unique design ensures more consistent, colder holding temperatures and faster recovery in high use situations.
- Bottom mounted condensing unit positioned for easy maintenance; "no stoop" lower shelf maximizes visibility by raising merchandised product to higher level.

### CABINET CONSTRUCTION

- Exterior - attractive, high luster copper aluminum finish with black trim.
- Low-E, double pane thermal insulated glass sides and door assembly. The latest in energy efficient technology.
- Interior - attractive, NSF approved, white aluminum interior liner with 300 series stainless steel floor.
- Insulation - entire cabinet structure is foamed-in-place using Ecomate. A new, innovative, high density, polyurethane insulation that has zero ozone depletion potential (ODP) and zero global warming potential (GWP).
- Welded, heavy duty steel frame rail, black powder coated for corrosion protection.
- Frame rail fitted with leg levelers.
- Illuminated exterior front sign panel. Variety of sign options available.

### DOOR

- "Low-E", double pane thermal insulated glass door assembly with extruded aluminum frame. The latest in energy efficient technology.
- Door fitted with 12" (305 mm) long extruded handle.
- Self closing door. Positive seal, torsion type closure system.
- Magnetic door gasket of one piece construction, removable without tools for ease of cleaning.

### SHELVING

- Four (4) adjustable, heavy duty, white PVC coated wire shelves 23⅝"L x 20⅞"D (601 mm x 531 mm). Four (4) chrome plated shelf clips included per shelf.
- Shelf support pilasters made of same material as cabinet interior; shelves are adjustable on½" (13 mm) increments.

### LIGHTING

- Front lighting system utilizes two (2) full-length, safety shielded fluorescent bulbs for enhanced, shadow-free illumination.
- Cabinet lighting utilizes electronic ballast and T-8 bulbs for brighter illumination, longer bulb life and increased energy efficiency.

### MODEL FEATURES

- Evaporator is epoxy coated to eliminate the potential of corrosion.
- See our website www.truemfg.com for latest color and sign offerings.
- Listed under NSF-7 for the storage and/or display of packaged or bottled product.

### ELECTRICAL

- Unit completely pre-wired at factory and ready for final connection to a 115/60/1 phase, 15 amp dedicated outlet. Cord and plug set included.

115/60/1
NEMA-5-15R

### OPTIONAL FEATURES/ACCESSORIES

Upcharge and lead times may apply.

- ❑ 230 - 240V / 50 Hz.
- ❑ Black exterior.
- ❑ White exterior.
- ❑ Rosewood exterior.
- ❑ Black aluminum interior liner.
- ❑ 6" (153 mm) standard legs.
- ❑ 6" (153 mm) seismic/flanged legs.
- ❑ 2½" (64 mm) diameter castors.
- ❑ 4" (102 mm) diameter castors.
- ❑ Red wine thermostat.
- ❑ Chocolate thermostat.
- ❑ White wine thermostat.
- ❑ Barrel lock (factory installed).
- ❑ Black shelves.
- ❑ TrueFlex/TrueTrac gravity feed organizers.
- ❑ True offer's five versions of the G4SM-23 with a variety of features to increase the merchandiser's function and versatility, allowing it to be customized to your needs.
- ❑ Remote cabinets (condensing unit supplied by others; system comes standard with 404A expansion valve and requires R404A refrigerant). Consult factory technical service department for BTU information. All remote units must be hard wired during installation.

## PLAN VIEW

| CUBIC FEET | 23 |
|---|---|

* Based on ANSI/AHAM HRF-1-2004

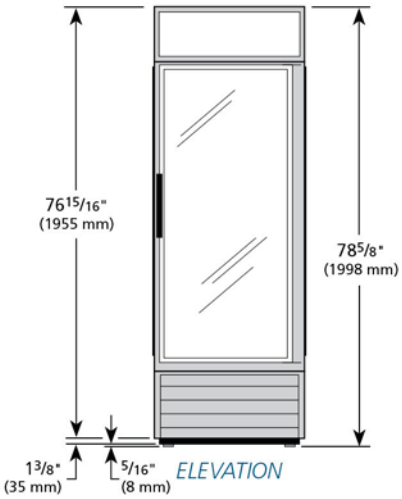


ELEVATION

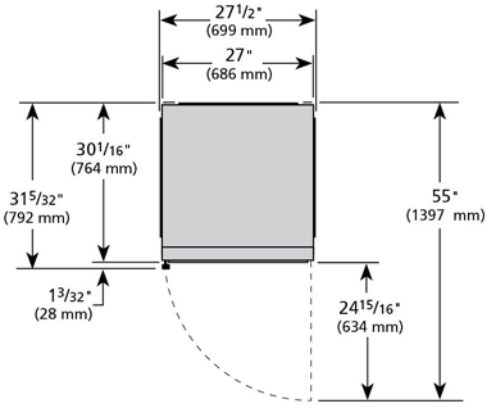


PLAN VIEW

**WARRANTY**
One year warranty on all parts and labor and an additional 4 year warranty on compressor. (U.S.A. only)

METRIC DIMENSIONS ROUNDED UP TO THE NEAREST WHOLE MILLIMETER

SPECIFICATIONS SUBJECT TO CHANGE WITHOUT NOTICE

| Model | Elevation | Right | Plan | 3D | Back |
|---|---|---|---|---|---|
| G4SM-23 | TFAY10E | TFAY10S | TFAY10P | TFAY103 | |


**TRUE FOOD SERVICE EQUIPMENT**

2001 East Terra Lane • O'Fallon, Missouri 63366 • (636)240-2400 • Fax (636)272-2408 • (800)325-6152 • Intl. Fax# (001)636-272-7546 • www.truemfg.com