TRUE FOOD SERVICE EQUIPMENT, INC.
2001 East Terra Lane • O'Fallon, Missouri 63366
(636)240-2400 • Fax (636)272-2408 • (800)325-6152 • Intl Fax# (001)636-272-7546
Parts Dept. (800)424-TRUE • Parts Dept. Fax# (636)272-9471 • www.truemfg.com

Project Name: _____
Location: _____
Item #: _____ *Qty:* _____
Model #: _____

AIA #
SIS #

Model:
G4SM-23-RGS

Glass Four Sided Merchandiser:
Swing Door Rotating Glass Shelf Refrigerator

G4SM-23-RGS

- The world's #1 manufacturer of glass door merchandisers.
- True's commitment to using the highest quality materials and oversized refrigeration systems provides the user with colder product temperatures, and lower utility costs in a unique merchandiser that creates a dynamic 360°product display.
- Exterior - attractive, high luster copper aluminum finish with black trim. Illuminated front sign panel.
- Oversized, factory balanced, refrigeration system holds 33°F to 38°F (.5°C to 3.3°C).
- Interior - attractive, NSF approved, white aluminum interior liner with 300 series stainless steel floor.
- Door is self closing with a positive seal, torsion type closure system.
- "Low-E", double pane thermal glass in door assembly, sides and rear. The latest in energy efficient technology.
- Entire cabinet structure is foamed-in-place using Ecomate. A high density, polyurethane insulation that has zero ozone depletion potential (ODP) and zero global warming potential (GWP).

Bottom mounted units feature

- "No stoop" lower shelf to maximize product visibility.
- Storage on top of cabinet.
- Easily accessible condenser coil for cleaning.

ROUGH-IN DATA

Specifications subject to change without notice.
Chart dimensions rounded up to the nearest ⅛" (millimeters rounded up to next whole number).

Model	Doors	Shelves	Cabinet Dimensions (inches) (mm) L	D†	H	HP	Voltage	Amps	NEMA Config.	Cord Length (total ft.) (total m)	Crated Weight (lbs.) (kg)
G4SM-23-RGS	1	6	27½ 699	30⅛ 766	78⅝ 1998	½ ½	115/60/1 230-240/50/1	10.0 5.0	5-15P ▲	9 2.74	405 184

† Depth does not include 1⅛" (29 mm) for door handle.

▲Plug type varies by country.

MADE IN U.S.A. SINCE 1945 · 5 YEAR COMPRESSOR WARRANTY USA · UL · CSA · NSF · CE

9/10 Printed in U.S.A.

APPROVALS:

AVAILABLE AT:

Model:

G4SM-23-RGS

Glass Four Sided Merchandiser:

Swing Door Rotating Glass Shelf Refrigerator

STANDARD FEATURES

DESIGN

- True's commitment to using the highest quality materials and oversized refrigeration systems provides the user with colder product temperatures, and lower utility costs in a stylish merchandiser that creates a dynamic 360°product display.
- Attention commanding-revolving glass shelves provide high visibility difference for high profit dessert items.

REFRIGERATION SYSTEM

- Factory engineered, self-contained, capillary tube system using environmentally friendly (CFC free) 134A refrigerant.
- Extra large evaporator coil balanced with higher horsepower compressor and large condenser; maintains cabinet temperatures of 33°F to 38°F (.5°C to 3.3°C).
- Sealed, cast iron, self-lubricating evaporator fan motor(s) and larger fan blades give True merchandisers a more efficient low velocity, high volume airflow design. This unique design ensures more consistent, colder holding temperatures and faster recovery in high use situations.
- Bottom mounted condensing unit positioned for easy maintenance; "no stoop" lower shelf maximizes visibility by raising merchandised product to higher level.

CABINET CONSTRUCTION

- Exterior - attractive, high luster copper aluminum finish with black trim.
- Low-E, double pane thermal insulated glass sides and door assembly. The latest in energy efficient technology.
- Interior - attractive, NSF approved, white aluminum interior liner with 300 series stainless steel floor.
- Insulation - entire cabinet structure is foamed-in-place using Ecomate. A high density, polyurethane insulation that has zero ozone depletion potential (ODP) and zero global warming potential (GWP).
- Welded, heavy duty steel frame rail, black powder coated for corrosion protection.
- Frame rail fitted with leg levelers.
- Illuminated exterior front sign panel. Variety of sign options available.

DOOR

- "Low-E", double pane thermal insulated glass door assembly with extruded aluminum frame. The latest in energy efficient technology.
- Door fitted with 12" (305 mm) long extruded handle.
- Self closing door. Positive seal, torsion type closure system.
- Magnetic door gasket of one piece construction, removable without tools for ease of cleaning.

SHELVING

- 360°revolving shelf system with 6 non-adjustable 21 ⅝" (220 mm) diameter round shelves; 5 tempered glass and 1 templered mirrored glass. Mirrored shelf designed to be used on bottom level.

LIGHTING

- Safety shielded fluorescent interior lighting. Door utilizes full-length, patented, integrated door light (IDL) system.
- Cabinet lighting utilizes electronic ballast and T-8 bulbs for brighter illumination, longer bulb life and increased energy efficiency.

MODEL FEATURES

- Evaporator is epoxy coated to eliminate the potential of corrosion.
- See our website www.truemfg.com for latest color and sign offerings.
- NSF-7 compliant for open food product.

ELECTRICAL

- Unit completely pre-wired at factory and ready for final connection to a 115/60/1 phase, 15 amp dedicated outlet. Cord and plug set included.

115/60/1
NEMA-5-15R

OPTIONAL FEATURES/ACCESSORIES

Upcharge and lead times may apply.

- ❑ 230 - 240V / 50 Hz.
- ❑ Black exterior.
- ❑ White exterior.
- ❑ Rosewood exterior.
- ❑ Black aluminum interior liner.
- ❑ 6" (153 mm) standard legs.
- ❑ 6" (153 mm) seismic/flanged legs.
- ❑ 2½" (64 mm) diameter castors.
- ❑ 4" (102 mm) diameter castors.
- ❑ Red wine thermostat.
- ❑ Chocolate thermostat.
- ❑ White wine thermostat.
- ❑ Barrel lock (factory installed).
- ❑ True offer's five versions of the G4SM-23 with a variety of features to increase the merchandiser's function and versatility, allowing it to be customized to your needs.
- ❑ Remote cabinets (condensing unit supplied by others; system comes standard with 404A expansion valve and requires R404A refrigerant). Consult factory technical service department for BTU information. All remote units must be hard wired during installation.

PLAN VIEW

CUBIC FEET	23

* Based on ANSI/AHAM HRF-1-2004

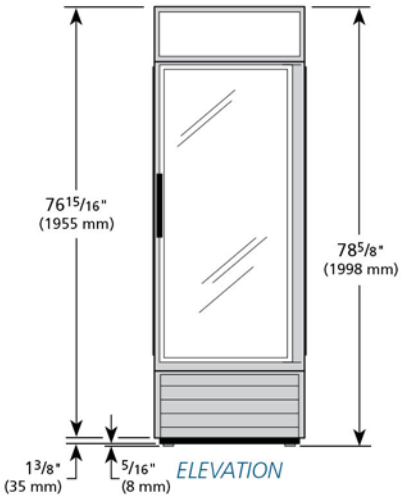

ELEVATION

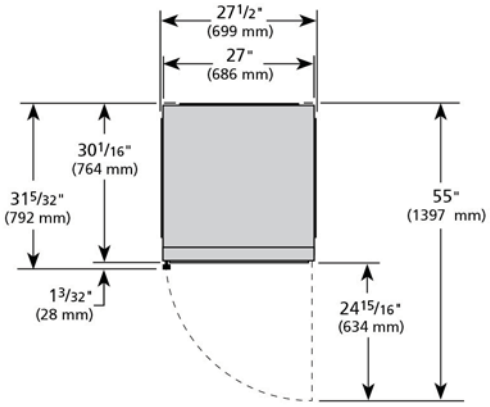

PLAN VIEW

WARRANTY
One year warranty on all parts and labor and an additional 4 year warranty on compressor. (U.S.A. only)

METRIC DIMENSIONS ROUNDED UP TO THE NEAREST WHOLE MILLIMETER

SPECIFICATIONS SUBJECT TO CHANGE WITHOUT NOTICE

Model	Elevation	Right	Plan	3D	Back
G4SM-23-RGS	TFAY10E	TFAY10S	TFAY10P	TFAY103	

TRUE FOOD SERVICE EQUIPMENT

2001 East Terra Lane • O'Fallon, Missouri 63366 • (636)240-2400 • Fax (636)272-2408 • (800)325-6152 • Intl. Fax# (001)636-272-7546 • www.truemfg.com