TRUE FOOD SERVICE EQUIPMENT, INC.
2001 East Terra Lane • O'Fallon, Missouri 63366
(636)240-2400 • Fax (636)272-2408 • (800)325-6152 • Intl Fax# (001)636-272-7546
Parts Dept. (800)424-TRUE • Parts Dept. Fax# (636)272-9471 • www.truemfg.com

Project Name: _____
Location: _____
Item #: _____ *Qty:* _____
Model #: _____

AIA #
SIS #

Model:
GDM-12FC

Glass Door Floral Case:
Swing Door Refrigerator

GDM-12FC

- The world's #1 manufacturer of glass door merchandisers.
- Oversized and balanced refrigeration system, factory sealed and pre-lubricated for long life. Designed to accommodate a broad range of floral temperature settings, holds 35°F (1.6°C).
- Exterior - non-peel or chip black laminated vinyl; durable and permanent.
- Interior - attractive, NSF approved, black aluminum interior liner with 300 series stainless steel floor.
- Self closing door. Positive seal, torsion type closure system.
- "Low-E", double pane thermal insulated glass door assembly with mitered plastic channel frame. The latest in energy efficient technology.
- Adjustable, heavy duty black PVC coated shelves.
- Special low UV emitting interior lighting designed for flowers to prevent premature discoloration.
- Door decal
- Entire cabinet structure is foamed-in-place using Ecomate. A high density, polyurethane insulation that has zero ozone depletion potential (ODP) and zero global warming potential (GWP).

Bottom mounted units feature

- "No stoop" lower shelf to maximize product visibility.
- Storage on top of cabinet.
- Easily accessible condenser coil for cleaning.

ROUGH-IN DATA

Specifications subject to change without notice.
Chart dimensions rounded up to the nearest ⅛" (millimeters rounded up to next whole number).

Model	Doors	Shelves	Cabinet Dimensions (inches) (mm) L	D†	H	HP	Voltage	Amps	NEMA Config.	Cord Length (total ft.) (total m)	Crated Weight (lbs.) (kg)
GDM-12FC	1	3	24⅞ 632	23⅛ 588	62⅜ 1585	⅕ ¼	115/60/1 230-240/50/1	4.4 3.0	5-15P ▲	9 2.74	233 106

† Depth does not include 1⅜" (35 mm) for door handle and 1" (26 mm) for rear bumpers.

▲Plug type varies by country.

10/10 Printed in U.S.A.

APPROVALS:

AVAILABLE AT:

Model:

GDM-12FC

Glass Door Floral Case:

Swing Door Refrigerator

STANDARD FEATURES

DESIGN

- True's commitment to using the highest quality materials and refrigeration systems provides the user with better product temperatures, and lower utility costs in an attractive merchandiser that brilliantly displays high profit floral arrangements.
- True's floral merchandisers offer interior agro lighting combined with a baffled airflow design which creates the ideal environment to prolong fresh flower shelf life.

REFRIGERATION SYSTEM

- Factory engineered, self-contained, capillary tube system using environmentally friendly (CFC free) 134A refrigerant.
- Oversized and balanced refrigeration system, factory sealed and pre-lubricated for long life. Designed to accommodate a broad range of floral temperature settings, holds 35°F (1.6°C).
- Sealed, cast iron, self-lubricating evaporator fan motor(s) and larger fan blades give True merchandisers a more efficient low velocity, high volume airflow design.
- Bottom mounted condensing unit positioned for easy maintenance; "No stoop" lower shelf maximizes visibility by raising merchandised product to higher level.
- Baffled airflow provides even air distribution for longer shelf life of fresh flowers.

CABINET CONSTRUCTION

- Exterior - non-peel or chip black laminated vinyl; durable and permanent.
- Interior - attractive, NSF approved, black aluminum interior liner with 300 series stainless steel floor.
- Insulation - entire cabinet structure is foamed-in-place using Ecomate. A high density, polyurethane insulation that has zero ozone depletion potential (ODP) and zero global warming potential (GWP).
- Welded, heavy duty steel frame rail, black powder coated for corrosion protection.
- Frame rail fitted with leg levelers.
- Door sign decal.

DOOR

- "Low-E", double pane thermal insulated glass door assembly with mitered plastic channel frame. The latest in energy efficient technology.
- Door fitted with 12" (305 mm) long black PVC handle.
- Self closing door. Positive seal, torsion type closure system.
- Magnetic door gasket of one piece construction, removable without tools for ease of cleaning.

SHELVING

- Two (2) adjustable, heavy duty black PVC coated wire shelves 20⅝"L x 17½"D (524 mm x 445 mm). Four (4) chrome plated shelf clips included per shelf.
- Shelf support pilasters made of same material as cabinet interior; shelves are adjustable on ½" (13 mm) increments.

LIGHTING

- Low UV emitting fluorescent interior lighting. Safety shielded.
- Cabinet lighting utilizes electronic ballast and T-8 bulbs for brighter illumination, longer bulb life and increased energy efficiency.

MODEL FEATURES

- Evaporator is epoxy coated to eliminate the potential of corrosion

ELECTRICAL

- Unit completely pre-wired at factory and ready for final connection to a 115/60/1 phase, 15 amp dedicated outlet. Cord and plug set included.

115/60/1
NEMA-5-15R

OPTIONAL FEATURES/ACCESSORIES

Upcharge and lead times may apply.

- ❑ 230 - 240V / 50 Hz.
- ❑ White exterior.
- ❑ Rosewood exterior.
- ❑ Mirrored back.
- ❑ 2½" (64 mm) diameter castors.
- ❑ Barrel lock (factory installed).
- ❑ White wire shelves.
- ❑ Remote cabinets (condensing unit supplied by others; system comes standard with 404A expansion valve and requires R404A refrigerant). Consult factory technical service department for BTU information. All remote units must be hard wired during installation.

PLAN VIEW

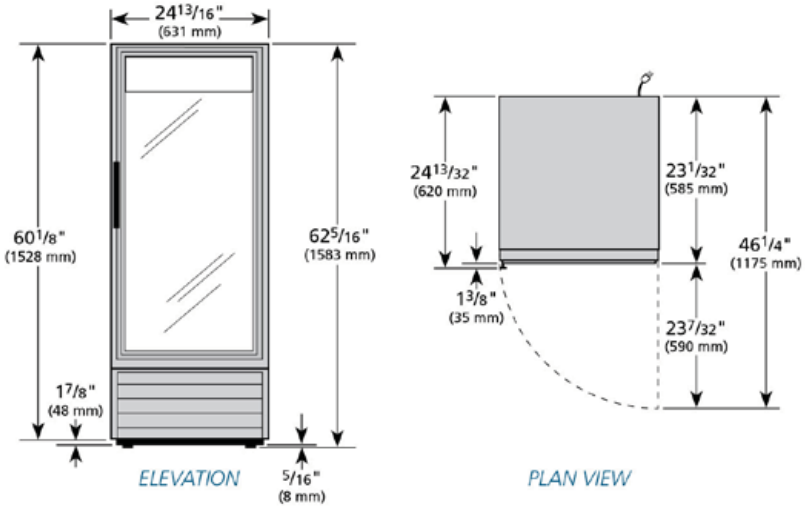

WARRANTY
One year warranty on all parts and labor and an additional 4 year warranty on compressor. (U.S.A. only)

METRIC DIMENSIONS ROUNDED UP TO THE NEAREST WHOLE MILLIMETER

SPECIFICATIONS SUBJECT TO CHANGE WITHOUT NOTICE

Model	Elevation	Right	Plan	3D	Back
GDM-12FC	TFAY57E	TFAY57S	TFAY55P	TFAY573	

TRUE FOOD SERVICE EQUIPMENT

2001 East Terra Lane • O'Fallon, Missouri 63366 • (636)240-2400 • Fax (636)272-2408 • (800)325-6152 • Intl. Fax# (001)636-272-7546 • www.truemfg.com