TRUE FOOD SERVICE EQUIPMENT, INC.
2001 East Terra Lane • O'Fallon, Missouri 63366
(636)240-2400 • Fax (636)272-2408 • (800)325-6152 • Intl Fax# (001)636-272-7546
Parts Dept. (800)424-TRUE • Parts Dept. Fax# (636)272-9471 • www.truemfg.com

Project Name: _____
Location: _____
Item #: _____ *Qty:* _____
Model #: _____

AIA #
SIS #

Model:
GDM-35RF

Glass Door Merchandiser:
Swing Door Radius Front Refrigerator

GDM-35RF

- The world's #1 manufacturer of glass door merchandisers.
- Oversized, factory balanced, refrigeration system holds 33°F to 38°F (.5°C to 3.3°C).
- Exterior - non-peel or chip white laminated vinyl; durable and permanent.
- Interior - attractive, NSF approved, white aluminum interior liner with 300 series stainless steel floor.
- Self closing doors. Positive seal, torsion type closure system.
- "Low-E", double pane thermal insulated glass door assemblies with mitered plastic channel frames. The latest in energy efficient technology.
- Patented integrated door light (IDL) system for brighter, shadow free illumination.
- Entire cabinet structure is foamed-in-place using Ecomate. A new, innovative, high density, polyurethane insulation that has zero ozone depletion potential (ODP) and zero global warming potential (GWP).

Bottom mounted units feature

- "No stoop" lower shelf to maximize product visibility.
- Storage on top of cabinet.
- Easily accessible condenser coil for cleaning.

ROUGH-IN DATA

Specifications subject to change without notice.
Chart dimensions rounded up to the nearest ⅛" (millimeters rounded up to next whole number).

Model	Doors	Shelves	Cabinet Dimensions (inches) (mm) L	D†	H	HP	Voltage	Amps	NEMA Config.	Cord Length (total ft.) (total m)	Crated Weight (lbs.) (kg)
GDM-35RF	2	8	39½ 1004	32¾ 832	78⅝ 1998	½ ½	115/60/1 230-240/50/1	9.2 3.7	5-15P ▲	9 2.74	415 189

† Depth does not include 1⅛" (29 mm) for door handles.

▲Plug type varies by country.

Printed in U.S.A.

APPROVALS:

AVAILABLE AT:

Model:

GDM-35RF

Glass Door Merchandiser:

Swing Door Radius Front Refrigerator

STANDARD FEATURES

DESIGN

- True's commitment to using the highest quality materials and oversized refrigeration systems provides the user with colder product temperatures, and lower utility costs in an attractive merchandiser that brilliantly displays packaged food and beverages.

REFRIGERATION SYSTEM

- Factory engineered, self-contained, capillary tube system using environmentally friendly (CFC free) 134A refrigerant.
- Extra large evaporator coil balanced with higher horsepower compressor and large condenser; maintains cabinet temperatures of 33°F to 38°F (.5°C to 3.3°C).
- Sealed, cast iron, self-lubricating evaporator fan motor(s) and larger fan blades give True merchandisers a more efficient low velocity, high volume airflow design. This unique design ensures faster temperature pull down of warm product, colder holding temperatures and faster recovery in high use situations.
- Bottom mounted condensing unit positioned for easy maintenance. "No stoop" lower shelf maximizes visibility by raising merchandised product to higher level.

CABINET CONSTRUCTION

- Exterior - non-peel or chip white laminated vinyl; durable and permanent.
- Interior - attractive, NSF approved, white aluminum liner with 300 series stainless steel floor.
- Insulation - entire cabinet structure is foamed-in-place using Ecomate. A new, innovative, high density, polyurethane insulation that has zero ozone depletion potential (ODP) and zero global warming potential (GWP).
- Welded, heavy duty steel frame rail, black powder coated for corrosion protection.
- Frame rail fitted with leg levelers.

DOORS

- "Low-E", double pane thermal insulated glass door assemblies with mitered plastic channel frames. The latest in energy efficient technology.
- Each door fitted with 12" (305 mm) long extruded handle.
- Self closing door(s). Positive seal, torsion type closure system.
- Magnetic door gasket(s) of one piece construction, removable without tools for ease of cleaning.

SHELVING

- Four (4) adjustable, heavy duty PVC coated wire shelves 35 ¼"L x 23 ⅜"D (896 mm x 594 mm). Four (4) chrome plated shelf clips included per shelf.
- Shelf support pilasters made of same material as cabinet interior; shelves are adjustable on ½" (13 mm) increments.

LIGHTING

- Safety shielded fluorescent interior lighting. Door(s) utilize(s) full-length, patented, integrated doors light (IDL) system.
- Cabinet lighting utilizes electronic ballast and T-8 bulbs for brighter illumination, longer bulb life and increased energy efficiency.

MODEL FEATURES

- Evaporator is epoxy coated to eliminate the potential of corrosion.
- See our website www.truemfg.com for latest color and sign offerings.
- Convenient clean-out drain built in cabinet floor.
- Listed under NSF-7 for the storage and/or display of packaged or bottled product.

ELECTRICAL

- Unit completely pre-wired at factory and ready for final connection to a 115/60/1 phase, 15 amp dedicated outlet. Cord and plug set included.

115/60/1
NEMA-5-15R

OPTIONAL FEATURES/ACCESSORIES

Upcharge and lead times may apply.

- ❑ 230 - 240V / 50 Hz.
- ❑ Black exterior.
- ❑ Rosewood exterior.
- ❑ Black aluminum interior liner with black shelving.
- ❑ 6" (153 mm) standard legs.
- ❑ 6" (153 mm) seismic/flanged legs.
- ❑ 2 ½" (64 mm) diameter castors.
- ❑ Red wine thermostat.
- ❑ White wine thermostat.
- ❑ Chocolate thermostat.
- ❑ Padlock.
- ❑ Additional shelves.
- ❑ TrueFlex/TrueTrac gravity feed organizers.
- ❑ Pricing strips.
- ❑ Remote cabinets (condensing unit supplied by others; system comes standard with 404A expansion valve and requires R404A refrigerant). Consult factory technical service department for BTU information. All remote units must be hard wired during installation.

PLAN VIEW

CUBIC FEET	35

* Based on ANSI/AHAM HRF-1-2004

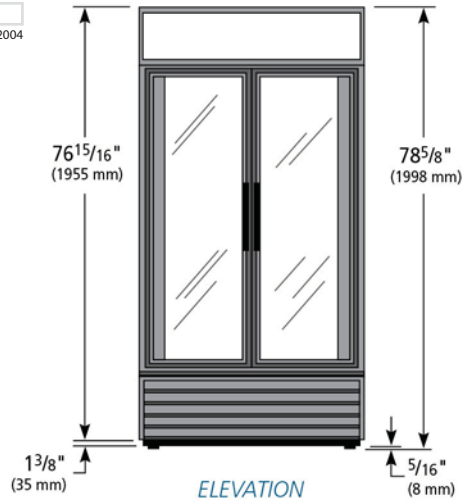

ELEVATION

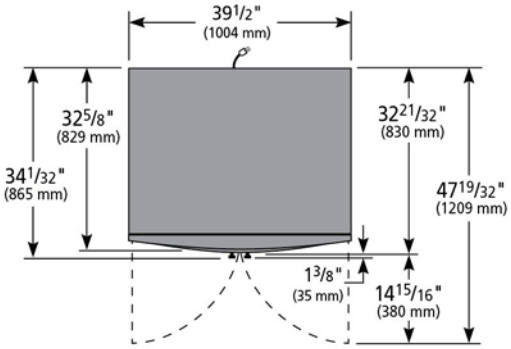

PLAN VIEW

WARRANTY
One year warranty on all parts and labor and an additional 4 year warranty on compressor. (U.S.A. only)

METRIC DIMENSIONS ROUNDED UP TO THE NEAREST WHOLE MILLIMETER

SPECIFICATIONS SUBJECT TO CHANGE WITHOUT NOTICE

Model	Elevation	Right	Plan	3D	Back
GDM-35RF	TFAY37E	TFAY37S	TFAY37P	TFAX373	

TRUE FOOD SERVICE EQUIPMENT

2001 East Terra Lane • O'Fallon, Missouri 63366 • (636)240-2400 • Fax (636)272-2408 • (800)325-6152 • Intl. Fax# (001)636-272-7546 • www.truemfg.com