TRUE FOOD SERVICE EQUIPMENT, INC.
2001 East Terra Lane • O'Fallon, Missouri 63366
(636)240-2400 • Fax (636)272-2408 • (800)325-6152 • Intl Fax# (001)636-272-7546
Parts Dept. (800)424-TRUE • Parts Dept. Fax# (636)272-9471 • www.truemfg.com

Project Name: _____
Location: _____
Item #: _____ *Qty:* _____
Model #: _____

AIA #
SIS #

Model:
GDM-5PT

Glass Door Merchandiser:
Swing Door Pass-Thru Counter-Top Refrigerator

GDM-5PT

- The world's #1 manufacturer of glass door merchandisers.
- True's commitment to using the highest quality materials and oversized refrigeration systems provides the user with colder product temperatures, and lower utility costs in an attractive merchandiser that brilliantly displays packaged food and beverages.
- Pass-thru design allows for convenient restocking, fast service, and attractive display.
- Oversized, factory balanced, refrigeration system holds 33°F to 38°F (.5°C to 3.3°C).
- Exterior - non-peel or chip white laminated vinyl; durable and permanent.
- Interior - attractive, NSF approved, white aluminum interior liner with stainless steel floor.
- Self closing doors. Positive seal, torsion type closure system.
- "Low-E", double pane thermal insulated glass door assemblies with mitered plastic channel frames. The latest in energy efficient technology.
- Safety shielded fluorescent interior lighting for longer, brighter, shadow-free illumination.
- Entire cabinet structure is foamed-in-place using Ecomate. A high density, polyurethane insulation that has zero ozone depletion potential (ODP) and zero global warming potential (GWP).

ROUGH-IN DATA

Specifications subject to change without notice.
Chart dimensions rounded up to the nearest ⅛" (millimeters rounded up to next whole number).

Model	Doors	Shelves	Cabinet Dimensions (inches) (mm) L	D†	H*	HP	Voltage	Amps	NEMA Config.	Cord Length (total ft.) (total m)	Crated Weight (lbs.) (kg)
GDM-5PT	1 fr/ 1bk	2	24 610	23⅞ 607	37 940	⅕ ¼	115/60/1 230-240/50/1	5.2 3.0	5-15P ▲	9 2.74	210 96

† Depth does not include 1⅜" (35 mm) each side for door handle.
* Height does not include 1" (26 mm) for system mechanical components.

▲Plug type varies by country.

MADE IN U.S.A. SINCE 1945 · 5 YEAR COMPRESSOR WARRANTY USA · c UL us · NSF

7/11 Printed in U.S.A.

APPROVALS:

AVAILABLE AT:

Model:

GDM-5PT

Glass Door Merchandiser:

Swing Door Pass-Thru Counter-Top Refrigerator

STANDARD FEATURES

DESIGN

- True's commitment to using the highest quality materials and oversized refrigeration systems provides the user with colder product temperatures, and lower utility costs in an attractive merchandiser that brilliantly displays packaged food and beverages.

REFRIGERATION SYSTEM

- contained, capillary tube system using environmentally friendly (CFC free) 134A refrigerant.
- Extra large evaporator coil balanced with higher horsepower compressor and large condenser; maintains cabinet temperatures of 33°F to 38°F (.5°C to 3.3°C).
- Sealed, cast iron, self-lubricating evaporator fan motor(s) and larger fan blade gives True merchandisers a more efficient low velocity, high volume airflow design. This unique design ensures faster temperature pull down of warm product, colder holding temperatures and faster recovery in high use situations.

CABINET CONSTRUCTION

- Exterior - non-peel or chip white laminated vinyl; durable and permanent.
- Interior - attractive, NSF approved, white aluminum liner with stainless steel floor.
- Insulation - entire cabinet structure is foamed-in-place using Ecomate. A high density, polyurethane insulation that has zero ozone depletion potential (ODP) and zero global warming potential (GWP).
- Cabinet fitted with leg levelers.
- Illuminated exterior sign panel. Variety of sign options available.

DOORS

- "Low-E", double pane thermal insulated glass door assemblies with mitered plastic channel frames. The latest in energy efficient technology.
- Each door fitted with 12" (305 mm) long extruded handle.
- Self closing doors. Positive seal, torsion type closure system.
- Magnetic door gaskets of one piece construction, removable without tools for ease of cleaning.

SHELVING

- Two (2) adjustable, heavy duty PVC coated wire shelves 19 11/16"L x 18"D (501 mm x 458 mm). Four (4) chrome plated shelf clips included per shelf.
- Shelf support pilasters made of same material as cabinet interior; shelves are adjustable on ½" (13 mm) increments.

LIGHTING

- Safety shielded fluorescent interior lighting.
- Cabinet lighting utilizes electronic ballast and T-8 bulbs for brighter illumination, longer bulb life and increased energy efficiency.

MODEL FEATURES

- Evaporator is epoxy coated to eliminate the potential of corrosion.
- Pass-thru design allows for convenient rear loading and front access for serving.
- See our website www.truemfg.com for latest color and sign offerings.
- NSF-7 compliant for open food product.

ELECTRICAL

- Unit completely pre-wired at factory and ready for final connection to a 115/60/1 phase, 15 amp dedicated outlet. Cord and plug set included.

115/60/1
NEMA-5-15R

OPTIONAL FEATURES/ACCESSORIES

Upcharge and lead times may apply.

- ❑ 230 - 240V / 50 Hz.
- ❑ 4" (102 mm) legs.
- ❑ Black exterior.
- ❑ Cherry exterior.
- ❑ Walnut exterior.
- ❑ Stainless steel exterior.
- ❑ Red wine thermostat.
- ❑ White wine thermostat.
- ❑ Chocolate thermostat.
- ❑ Barrel lock (factory installed).
- ❑ Additional shelving.
- ❑ 1 ¼" (32 mm) pricing strips.

PLAN VIEW

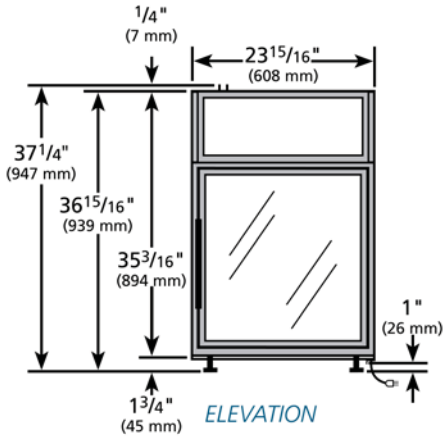

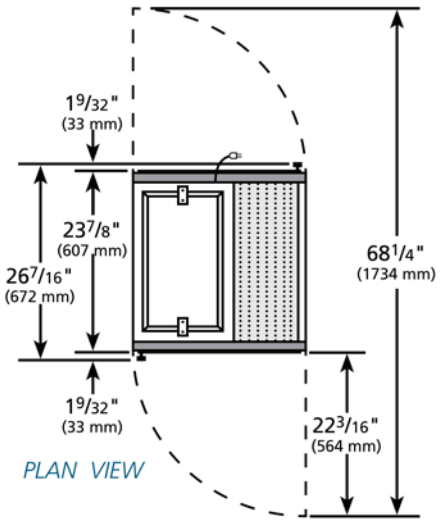

WARRANTY
One year warranty on all parts and laborand an additional 4 year warranty on compressor. (U.S.A. only)

METRIC DIMENSIONS ROUNDED UP TO THE NEAREST WHOLE MILLIMETER

SPECIFICATIONS SUBJECT TO CHANGE WITHOUT NOTICE

Model	Elevation	Right	Plan	3D	Back
GDM-5PT	TFAY50E	TFAY51S	TFAY51P	TFAY513	

TRUE FOOD SERVICE EQUIPMENT

2001 East Terra Lane • O'Fallon, Missouri 63366 • (636)240-2400 • Fax (636)272-2408 • (800)325-6152 • Intl. Fax# (001)636-272-7546 • www.truemfg.com