**TRUE FOOD SERVICE EQUIPMENT, INC.**
2001 East Terra Lane • O'Fallon, Missouri 63366
(636)240-2400 • Fax (636)272-2408 • (800)325-6152 • Intl Fax# (001)636-272-7546
Parts Dept. (800)424-TRUE • Parts Dept. Fax# (636)272-9471 • www.truemfg.com

*Project Name:* _____
*Location:* _____
*Item #:* _____ *Qty:* _____
*Model #:* _____

*AIA #*
*SIS #*

Model:
**T-19F**

# T-Series:
*Reach-In Solid Swing Door -10°F Freezer*

## T-19F

- True's solid door reach-in's are designed with enduring quality that protects your long term investment.
- Designed using the highest quality materials and components to provide the user with colder product temperatures, lower utility costs, exceptional food safety and the best value in today's food service marketplace.
- Extra large evaporator coil balanced with higher horsepower compressor and large condenser maintains -10°F (-23.3°C) cabinet temperatures. Ideally suited for both frozen foods and ice cream.
- Stainless steel solid door and front. The very finest stainless with higher tensile strength for fewer dents and scratches.
- Adjustable, heavy duty PVC coated shelves.
- Positive seal self-closing door. Lifetime guaranteed door hinges and torsion type closure system.
- Automatic defrost system time-initiated, temperature-terminated. Saves energy consumption and provides shortest possible defrost cycle.

**Bottom mounted units feature:**

- "No stoop" lower shelf.
- Storage on top of cabinet.
- Compressor performs in coolest, most grease free area of kitchen.
- Easily accessible condenser coil for cleaning.

## ROUGH-IN DATA

Specifications subject to change without notice.
Chart dimensions rounded up to the nearest ⅛" (millimeters rounded up to next whole number).

| Model | Doors | Shelves | Cabinet Dimensions (inches) (mm) L | D | H* | HP | Voltage | Amps | NEMA Config. | Cord Length (total ft.) (total m) | Crated Weight (lbs.) (kg) |
|---|---|---|---|---|---|---|---|---|---|---|---|
| T-19F | 1 | 3 | 27<br>686 | 24½<br>623 | 75¼<br>1912 | ⅓<br>⅓ | 115/60/1<br>230-240/50/1 | 6.8<br>2.6 | 5-15P<br>▲ | 9<br>2.74 | 250<br>114 |

* Height does not include 3¼" (83 mm) for castors or 6" (153 mm) for optional legs.

▲Plug type varies by country.

7/11 Printed in U.S.A.

*APPROVALS:*

*AVAILABLE AT:*

Model:

**T-19F**

# T-Series:

*Reach-In Solid Swing Door -10°F Freezer*

## STANDARD FEATURES

### DESIGN

- True's commitment to using the highest quality materials and oversized refrigeration systems provides the user with colder product temperatures, lower utility costs, exceptional food safety and the best value in today's food service marketplace.

### REFRIGERATION SYSTEM

- Factory engineered, self-contained, capillary tube system using environmentally friendly (CFC free) R404A refrigerant.
- Extra large evaporator coil balanced with higher horsepower compressor and large condenser; maintains -10°F (-23.3°C). Ideally suited for both frozen foods and ice cream.
- Sealed, cast iron, self-lubricating evaporator fan motor(s) and larger fan blades give True reach-in's a more efficient low velocity, high volume airflow design. This unique design ensures faster temperature recovery and shorter run times in the busiest of food service environments.
- Bottom mounted condensing unit positioned for easy cleaning. Compressor runs in coolest and most grease free area of the kitchen. Allows for storage area on top of unit.
- Automatic defrost system time-initiated, temperature-terminated. Saves energy consumption and provides shortest possible defrost cycle.

### CABINET CONSTRUCTION

- Exterior - Stainless steel front. Anodized quality aluminum ends, back and top.
- Interior - attractive, NSF approved, white aluminum liner. Stainless steel floor with coved corners.
- Insulation - entire cabinet structure and solid door are foamed-in-place using Ecomate. A high density, polyurethane insulation that has zero ozone depletion potential (ODP) and zero global warming potential (GWP).
- Welded, heavy duty steel frame rail, black powder coated for corrosion protection.
- Frame rail fitted with 2½" (64 mm) castors - locks provided on front set.

### DOOR

- Stainless steel exterior with white aluminum liner to match cabinet interior. Door extends full width of cabinet shell. Door lock is standard.
- Lifetime guaranteed recessed door handle. Door fitted with 12" (305 mm) long recessed handle that is foamed-in-place with a sheet metal interlock to ensure permanent attachment.
- Positive seal self-closing door. Lifetime guaranteed door hinges and torsion type closure system.
- Magnetic door gasket of one piece construction, removable without tools for ease of cleaning.

### SHELVING

- Three (3) adjustable, heavy duty PVC coated wire shelves 22⅞"L x 18¼"D (582 mm x 464 mm). Four (4) chrome plated shelf clips included per shelf.
- Shelf support pilasters made of same material as cabinet interior; shelves are adjustable on ½" (13 mm) increments.

### LIGHTING

- Incandescent interior lighting - safety shielded. Lights activated by rocker switch mounted above door.

### MODEL FEATURES

- Exterior temperature display.
- Evaporator is epoxy coated to eliminate the potential of corrosion.
- Rear airflow guards prevent product from blocking optimal airflow.
- NSF-7 compliant for open food product.

### ELECTRICAL

- Unit completely pre-wired at factory and ready for final connection to a 115/60/1 phase, 15 amp dedicated outlet. Cord and plug set included.

115/60/1
NEMA-5-15R

### OPTIONAL FEATURES/ACCESSORIES

Upcharge and lead times may apply.

- ❑ 230 - 240V / 50 Hz.
- ❑ 6" (153 mm) standard legs.
- ❑ 6" (153 mm) seismic/flanged legs.
- ❑ Novelty baskets.
- ❑ Additional shelves.
- ❑ Remote cabinets (condensing unit supplied by others; system comes standard with 404A expansion valve and requires R404A refrigerant). Consult factory technical service department for BTU information. All remote units must be hard wired during installation.

## PLAN VIEW

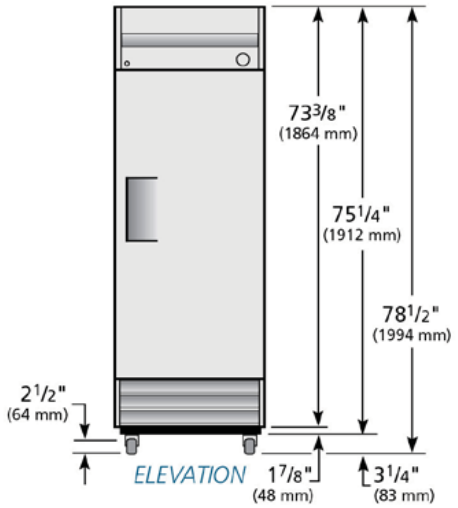


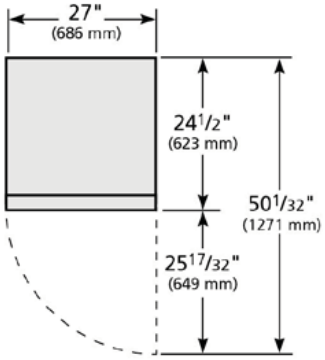


**WARRANTY**
One year warranty on all parts and labor and an additional 4 year warranty on compressor. (U.S.A. only)

METRIC DIMENSIONS ROUNDED UP TO THE NEAREST WHOLE MILLIMETER

SPECIFICATIONS SUBJECT TO CHANGE WITHOUT NOTICE

| Model | Elevation | Right | Plan | 3D | Back |
|---|---|---|---|---|---|
| T-19F | TFE045E | TFE045S | TFE015P | TFE0453 | |


**TRUE FOOD SERVICE EQUIPMENT**

2001 East Terra Lane • O'Fallon, Missouri 63366 • (636)240-2400 • Fax (636)272-2408 • (800)325-6152 • Intl. Fax# (001)636-272-7546 • www.truemfg.com