TRUE FOOD SERVICE EQUIPMENT, INC.
2001 East Terra Lane • O'Fallon, Missouri 63366-4434 • (636)240-2400
Fax (636)272-2408 • Toll Free (800)325-6152 • Intl Fax# (001)636-272-7546
Parts Dept. (800)424-TRUE • Parts Dept. Fax# (636)272-9471 • www.truemfg.com

Project Name: _____
Location: _____
Item #: _____ *Qty:* _____
Model #: _____

AIA #
SIS #

Model:
T-50-GC

Underbar Refrigeration:
Solid Slide Lid Glass and Plate Chiller/Froster

T-50-GC

- True's glass and plate chiller/ frosters are designed with enduring quality and value. Our commitment to using the highest quality materials and oversized refrigeration assures colder product temperatures and years of trouble free service.
- Large storage capacity to meet the supply and demand requirements during peak hours.
- Oversized, factory balanced, refrigeration system holds 0°F (-17.7°C) and below.
- Forced-air cooling, positively guided airflow provide efficient balanced temperatures throughout the cabinet. This unique design ensures fast frosting of dry glasses and plates.
- Exterior - heavy duty, wear resistant laminated black vinyl front and sides, matching black aluminum back. All stainless steel countertop and lid(s).
- Interior - long lasting, heavy duty galvanized steel.

ROUGH-IN DATA

Specifications subject to change without notice.
Chart dimensions rounded up to the nearest ⅛" (millimeters rounded up to next whole number).

Model	Lids	Capacity: 8" (204 mm) Mugs	Capacity: 10 oz. Steins	Shelves	Cabinet Dimensions (inches) (mm): L	D†	H	HP	Voltage	Amps	NEMA Config.	Cord Length (total ft.) (total m)	Crated Weight (lbs.) (kg)
T-50-GC	2	250	240	5	49⅝ 1261	26⅝ 677	33⅜ 848	⅓ ⅓	115/60/1 230-240/50/1	7.6 3.3	5-15P ▲	9 2.74	295 134

† Depth does not include 1" (26 mm) for rear bumpers.

▲Plug type varies by country.

8/14 Printed in U.S.A.

APPROVALS:

AVAILABLE AT:

Model:
T-50-GC

Underbar Refrigeration:
Solid Slide Lid Glass and Plate Chiller/Froster

STANDARD FEATURES

DESIGN
- True's glass and plate chiller/frosters are designed with enduring quality and value. Our commitment to using the highest quality materials and oversized refrigeration assures colder product temperatures and years of trouble free service.

REFRIGERATION SYSTEM
- Factory engineered, self-contained, capillary tube system using environmentally friendly (CFC free) R404A refrigerant.
- Extra large evaporator coil balanced with higher horsepower compressor and large condenser; maintains cabinet temperatures of 0°F (-17.7°C) and below.
- Sealed, cast iron, self-lubricating evaporator fan motor(s) and larger fan blades give True chiller/frosters a more efficient low velocity, high volume airflow design. This unique design ensures fast frosting of dry glasses and plates.
- Automatic defrost system time-initiated, time-terminated.
- Condensing unit accessed from behind front grill, slides out for easy maintenance.
- Forced-air cooling, positively guided airflow provide efficient balanced temperatures throughout the cabinet.

CABINET CONSTRUCTION
- Exterior - heavy duty, wear resistant laminated black vinyl front and sides, matching black aluminum back. All stainless steel countertop and lids.
- Interior - long lasting, heavy duty galvanized steel.
- Insulation - entire cabinet structure is foamed-in-place using Ecomate. A high density, polyurethane insulation that has zero ozone depletion potential (ODP) and zero global warming potential (GWP).
- Welded, heavy duty steel frame rail, black powder coated for corrosion protection.

SHELVING
- Five (5) adjustable, heavy duty PVC coated wire shelves 15 1/8"L x 19 5/16"D (385 mm x 491 mm). Split shelf design allows for effective rotation of chilled smallware, working with already chilled plates and glasses on one side while chilling dry product on the other side.

MODEL FEATURES
- Evaporator is epoxy coated to eliminate the potential of corrosion.
- Listed under NSF-7 for the storage and/or display of packaged or bottled product.

ELECTRICAL
- Unit completely pre-wired at factory and ready for final connection to a 115/60/1 phase, 15 amp dedicated outlet. Cord and plug set included.

115/60/1
NEMA-5-15R

OPTIONAL FEATURES/ACCESSORIES
Upcharge and lead times may apply.
- ❑ 230 - 240V / 50 Hz.
- ❑ 6" (153 mm) standard legs.
- ❑ 6" (153 mm) seismic/flanged legs.
- ❑ 2 1/2" (64 mm) diameter castors.
- ❑ 3" (77 mm) diameter castors.
- ❑ Ratchet locks and handles. Requires one per lid.
- ❑ Remote cabinets (condensing unit supplied by others; system comes standard with 404A expansion valve and requires R404A refrigerant). Consult factory technical service department for BTU information. All remote units must be hard wired during installation.

PLAN VIEW

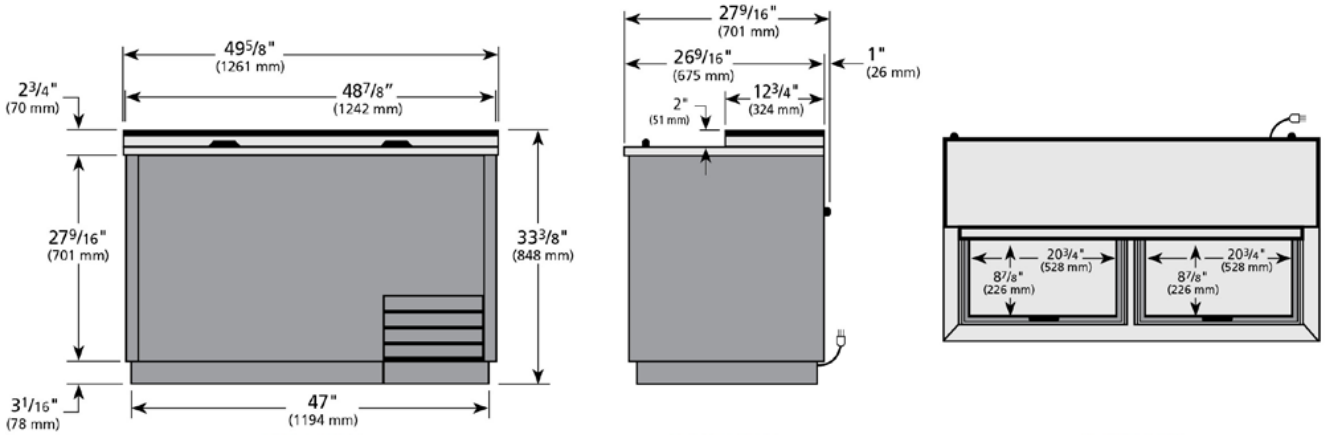

WARRANTY*
Three year warranty on all parts and labor and an additional 2 year warranty on compressor. (U.S.A. only)

*RESIDENTIAL APPLICATIONS: TRUE assumes no liability for parts or labor coverage for component failure or other damages resulting from installation in non-commercial or residential applications.

METRIC DIMENSIONS ROUNDED UP TO THE NEAREST WHOLE MILLIMETER

SPECIFICATIONS SUBJECT TO CHANGE WITHOUT NOTICE

Model	Elevation	Right	Plan	3D	Back
T-50-GC	TFLY01E	TFLY01S	TFLY01P	TFLY013	

TRUE FOOD SERVICE EQUIPMENT
2001 East Terra Lane • O'Fallon, Missouri 63366-4434 • (636)240-2400 • Fax (636)272-2408 • Toll Free (800)325-6152 • Intl. Fax# (001)636-272-7546 • www.truemfg.com