TRUE FOOD SERVICE EQUIPMENT, INC.
2001 East Terra Lane • O'Fallon, Missouri 63366-4434 • (636)240-2400
Fax (636)272-2408 • Toll Free (800)325-6152 • Intl Fax# (001)636-272-7546
Parts Dept. (800)424-TRUE • Parts Dept. Fax# (636)272-9471 • www.truemfg.com

Project Name: _____
Location: _____
Item #: _____ *Qty:* _____
Model #: _____

AIA #
SIS #

Model:
TBB-24-48G-S-LD

Underbar Refrigeration:
Glass Swing Door Stainless Steel 24" Back Bar Cooler with LED Lighting

Scan code for video

TBB-24-48G-S-LD

- True's refrigerated back bar coolers are designed with enduring quality and value. Our commitment to using the highest quality materials and oversized refrigeration assures colder product temperatures and years of trouble free service.
- Oversized, factory balanced, refrigeration system holds 33°F to 38°F (.5°C to 3.3°C).
- Exterior - stainless steel front and sides. Matching aluminum back. All stainless steel counter top.
- Interior - Stainless steel floor with ½" (13 mm) reinforced lip and heavy gauge galvanized steel walls.
- NSF-7 approved for packaged and bottled product.
- Positive seal doors.
- "Low-E", double pane thermal glass door assembly with extruded aluminum frames. The latest in energy efficient technology.
- LED interior lighting provides more even lighting throughout the cabinet. Safety shielded.
- Entire cabinet structure is foamed-in-place using Ecomate. A high density, polyurethane insulation that has zero ozone depletion potential (ODP) and zero global warming potential (GWP).

ROUGH-IN DATA

Specifications subject to change without notice.
Chart dimensions rounded up to the nearest ⅛" (millimeters rounded up to next whole number).

Model	Doors	Capacity 12 oz. Cans	Capacity ½ Barrels	Shelves	Cabinet Dimensions (inches) (mm) L	D†	H	HP	Voltage	Amps	NEMA Config.	Cord Length (total ft.) (total m)	Crated Weight (lbs.) (kg)
TBB-24-48G-S-LD	2	48 6-pks	2	4	49⅛ 1248	24½ 623	35⅝ 905	⅓ ⅓	115/60/1 230-240/50/1	7.6 4.2	5-15P ▲	7 2.13	310 141

† Depth does not include 1⅜" (35mm) and 1" (26 mm) for rear bumpers.

▲Plug type varies by country.

8/14 Printed in U.S.A.

APPROVALS:

AVAILABLE AT:

Model:

TBB-24-48G-S-LD

Underbar Refrigeration:

Glass Swing Door Stainless Steel 24" Back Bar Cooler with LED Lighting

STANDARD FEATURES

DESIGN

- True's refrigerated back bar coolers are designed with enduring quality and value. Our commitment to using the highest quality materials and oversized refrigeration assures colder product temperatures and years of trouble free service.

REFRIGERATION SYSTEM

- Factory engineered, self-contained, capillary tube system using environmentally friendly (CFC free) 134A refrigerant.
- Extra large evaporator coil balanced with higher horsepower compressor and large condenser; maintains cabinet temperatures of 33°F to 38°F (.5°C to 3.3°C).
- Sealed, cast iron, self-lubricating evaporator fan motor(s) and larger fan blades give True back bar coolers a more efficient low velocity, high volume airflow design. This unique design ensures faster temperature pull down of warm product, colder holding temperatures and faster recovery in high use situations.
- Condensing unit accessed from behind front grill, slides out for easy cleaning and maintenance.

CABINET CONSTRUCTION

- Exterior - stainless steel front and sides. Matching aluminum back. All stainless steel counter top.
- Interior - Stainless steel floor with ½" (13 mm) reinforced lip and heavy gauge galvanized steel walls.
- Door threshold protector prevents damage to cabinet from routine loading of product.
- Insulation - entire cabinet structure is foamed-in-place using Ecomate. A high density, polyurethane insulation that has zero ozone depletion potential (ODP) and zero global warming potential (GWP).
- Welded, heavy duty steel frame rail, black powder coated for corrosion protection.

DOORS

- "Low-E", double pane thermal insulated glass door assemblies with extruded aluminum frames. The latest in energy efficient technology.
- Each door fitted with 12" (305 mm) long extruded aluminum handle.
- Positive seal doors.
- Magnetic door gaskets of one piece construction, removable without tools for ease of cleaning.
- Door locks standard.

SHELVING

- Four (4) adjustable, heavy duty, black PVC coated wire shelves 17⅜"L x 16¼"D (442 mm x 413 mm). Four (4) chrome plated shelf clips included per shelf.
- Aluminum shelf support pilasters. Shelves are adjustable on ½" (13 mm) increments.

LIGHTING

- LED interior lighting provides more even lighting throughout the cabinet. Safety shielded.

MODEL FEATURES

- Evaporator is epoxy coated to eliminate the potential of corrosion.
- Designed to accommodate a variety of beer kegs.
- Listed under NSF-7 for the storage and/or display of packaged or bottled product.

ELECTRICAL

- Unit completely pre-wired at factory and ready for final connection to a 115/60/1 phase, 15 amp dedicated outlet. Cord and plug set included.

115/60/1
NEMA-5-15R

OPTIONAL FEATURES/ACCESSORIES

Upcharge and lead times may apply.

- ❑ 230 - 240V / 50 Hz.
- ❑ 6" (153 mm) standard legs.
- ❑ 6" (153 mm) seismic/flanged legs.
- ❑ 2½" (64 mm) diameter castors.
- ❑ 4" (102 mm) diameter castors.
- ❑ Additional shelves.
- ❑ TrueTrac one liter or wine bottle organizers.
- ❑ TrueTrac 12 oz. (355 ml) bottle organizers.
- ❑ Remote cabinets (condensing unit supplied by others; system comes standard with 404A expansion valve and requires R404A refrigerant). Consult factory technical service department for BTU information. All remote units must be hard wired during installation.

PLAN VIEW

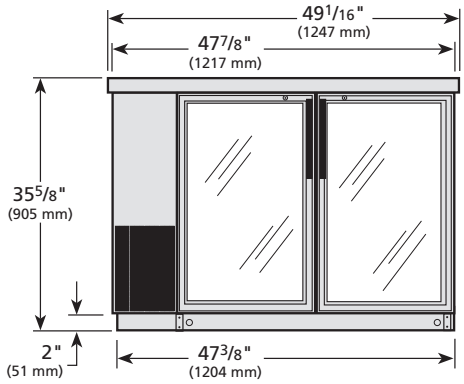

ELEVATION

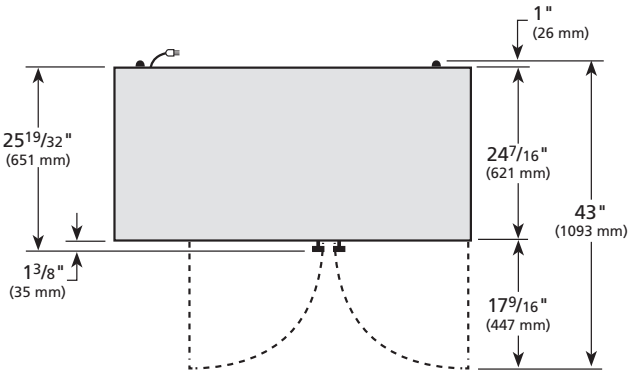

PLAN VIEW

WARRANTY*
Three year warranty on all parts and labor and an additional 2 year warranty on compressor. (U.S.A. only)

*RESIDENTIAL APPLICATIONS: TRUE assumes no liability for parts or labor coverage for component failure or other damages resulting from installation in non-commercial or residential applications.

METRIC DIMENSIONS ROUNDED UP TO THE NEAREST WHOLE MILLIMETER

SPECIFICATIONS SUBJECT TO CHANGE WITHOUT NOTICE

Model	Elevation	Right	Plan	3D	Back
TBB-24-48G-S-LD	TFJX25E	TFJX25S	TFJX25P	TFJX253	

TRUE FOOD SERVICE EQUIPMENT

2001 East Terra Lane • O'Fallon, Missouri 63366-4434 • (636)240-2400 • Fax (636)272-2408 • Toll Free (800)325-6152 • Intl. Fax# (001)636-272-7546 • www.truemfg.com