TRUE FOOD SERVICE EQUIPMENT, INC.
2001 East Terra Lane • O'Fallon, Missouri 63366
(636)240-2400 • Fax (636)272-2408 • (800)325-6152 • Intl Fax# (001)636-272-7546
Parts Dept. (800)424-TRUE • Parts Dept. Fax# (636)272-9471 • www.truemfg.com

Project Name: _____
Location: _____
Item #: _____ *Qty:* _____
Model #: _____

AIA #
SIS #

Model:
TDBD-96-3

Display Case:
Double Duty Refrigerated Deli Case

TDBD-96-3

- Double duty deli cases offer the added advantage of two refrigerated compartments. One for display to provide a high profile area for ready to serve deli products under the industry's best lighting and a second lower compartment for convenient bulk storage.
- Cabinet is NSF-7 certified to hold open food product.
- Oversized, factory balanced, refrigeration system holds 38°F to 40°F (3.3°C to 4.4°C). Gravity coil refrigeration system provides high humidty environment for exceptional preservation of meats and deli products.
- "Low-E", double pane thermal glass front display and rear self-closing doors provide maximum insulation value for greater efficiency and energy savings.
- Exterior - stainless steel front, sides and back. White laminated rear panel and rear louvered grill.
- Interior - attractive, NSF approved, white aluminum liner. Stainless steel floor with coved corners.
- Case is equipped with three (3) light sources for maximum product display; two (2) cabinet mounted and one (1) shelf mounted. Fluorescent lamps are low UV emitting to enhance product appearance and increase shelf life.
- Automatic defrost system; time-initiated, time-terminated.
- Entire cabinet structure is foamed-in-place using Ecomate. A high density, polyurethane insulation that has zero ozone depletion potential (ODP) and zero global warming potential (GWP).

ROUGH-IN DATA

Specifications subject to change without notice.
Chart dimensions rounded up to the nearest ⅛" (millimeters rounded up to next whole number).

Model	Doors	Half Length Shelves	Cabinet Dimensions (inches) (mm) L	D†	H	HP	Voltage	Amps	NEMA Config.	Cord Length (total ft.) (total m)	Crated Weight (lbs.) (kg)
TDBD-96-3	3	2	96⅛ 2442	35⅛ 893	55 1397	¾ ¾	115/60/1 230-240/50/1	16.0 4.8	5-20P ▲	9 2.74	815 370

† Depth does not include ½" (13 mm) for threaded drain fitting.

▲ Plug type varies by country.

8/11 Printed in U.S.A.

APPROVALS:

AVAILABLE AT:

Model:

TDBD-96-3

Display Case:
Double Duty Refrigerated Deli Case

STANDARD FEATURES

DESIGN
- True's commitment to using the highest quality materials and oversized refrigeration systems provides the user with colder product temperatures, and lower utility costs in an attractive display case that brilliantly displays deli meats and cheese.

REFRIGERATION SYSTEM
- Factory engineered, self-contained, capillary tube system using environmentally friendly (CFC free) 134A refrigerant.
- Gravity coil refrigeration systems provide high humidity environment for exceptional preservation of meats and deli products. Cabinet comes standard with two coils, one in the upper display area and one in the lower storage area.
- Extra large evaporator coil balanced with higher horsepower compressor and large condenser; maintains cabinet temperatures of 38°F to 40°F (3.3°C to 4.4°C).
- Automatic defrost system; time-initiated, time-terminated.
- Condensing unit located behind grill in back of unit. Entire system slides out for easy cleaning and maintanance.

CABINET CONSTRUCTION
- Exterior - stainless steel front, sides and back. White laminated vinyl rear panel and rear louvered grill.
- "Low-E", double pane thermal front viewing glass provides maximum insulation value for greater efficiency and energy savings.
- Stainless steel counter top provides surface for equipment such as registers and point-of-purchase novelties.
- Interior - attractive, NSF approved, white aluminum liner. Stainless steel floor with coved corners.
- Insulation - entire cabinet structure is foamed-in-place using Ecomate. A high density, polyurethane insulation that has zero ozone depletion potential (ODP) and zero global warming potential (GWP).
- Welded, heavy duty steel frame rail, black powder coated for corrosion protection.
- Frame rail fitted with leg levelers.
- Front viewing glass slanted 12.59° to minimize reflection from overhead lighting, enhancing your cold product presentations.

DOORS
- Glass door assemblies feature "Low-E", double pane thermal glass. The latest in energy efficient technology.
- Each door fitted with 12" (305 mm) long handle.
- Positive seal, self-closing doors. Sliding doors ride on stainless steel V-Channel with stainless steel bearings for smooth, even, positive closure. Doors fit within plastic channel frame.

SOLID STORAGE AREA DOORS
- Rear storage access doors are 300 series stainless exterior inserts with mitered plastic channel frames. Door liner is white aluminum to match cabinet interior. Doors are fully insulated.
- Each door fitted with 2 ¾" (70 mm) long handle.
- Positive seal, self-closing doors.

SHELVING
- Two (2) adjustable stainless steel mezzanine shelves 44 13/16"L x 12 1/8" D (1139 mm x 308 mm). Two (2) cantilevered brakets included per shelf. Four (4) non-adjustable heavy duty PVC coated wire shelves 28 3/8"L x 22 1/4"D (716 mm x 566 mm) create bottom level of display area.
- Stainless steel shelf support pilasters. Shelves are adjustable on ½" (13 mm) increments.

LIGHTING
- Case equipped with six (6) light sources for maximum product display; four (4) cabinet mounted and two (2) shelf mounted (one per shelf). Fluorescent lamps are low UV emitting to enhance product appearance and increase shelf life.
- Cabinet lighting utilizes electronic ballast and T-8 bulbs for brighter illumination, longer bulb life and increased energy efficiency. Lamps are safety shielded.

MODEL FEATURES
- Evaporators are epoxy coated to eliminate the potential of corrosion.
- Rear mounted exterior 4 amp 115V receptacle.
- Refrigerated lower storage area accessed from rear of cabinet.
- NSF-7 compliant for open food product.

ELECTRICAL
- Unit completely pre-wired at factory and ready for final connection to a 115/60/1 phase, 20 amp dedicated outlet. Cord and plug set included.

115/60/1
NEMA-5-20R

RECOMMENDED OPERATING CONDITIONS
- TDBD refrigerated models are designed to operate in an environment where temperatures and humidity do not exceed 75°F (24°C) and 55% relative humidity.

OPTIONAL FEATURES/ACCESSORIES
Upcharge and lead times may apply.
- ❑ 230 - 240V / 50 Hz.
- ❑ 6" (153 mm) standard legs (requires 6).
- ❑ 6" (153 mm) seismic/flanged legs (requires 6).
- ❑ 2 ½" (64 mm) diameter castors (requires 6).
- ❑ 4" (102 mm) diameter castors (requires 6).
- ❑ Ratchet locks (requires 2).
- ❑ Remote cabinets (condensing unit supplied by others; system comes standard with 404A expansion valve and requires R404A refrigerant). Consult factory technical service department for BTU information. All remote units must be hard wired during installation.

PLAN VIEW

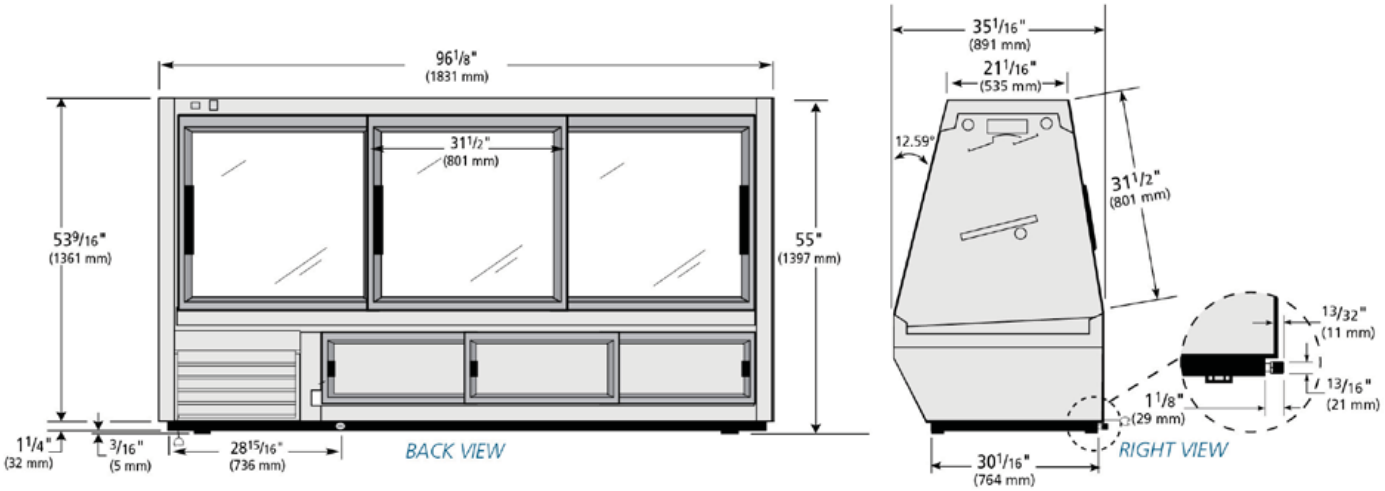

WARRANTY
One year warranty on all parts and labor and an additional 4 year warranty on compressor. (U.S.A. only)

METRIC DIMENSIONS ROUNDED UP TO THE NEAREST WHOLE MILLIMETER

SPECIFICATIONS SUBJECT TO CHANGE WITHOUT NOTICE

Model	Elevation	Right	Plan	3D	Back
TDBD-96-3	TFQY25E	TFSY10S	TFQY25P	TFQY253	TFQY25B

TRUE FOOD SERVICE EQUIPMENT
2001 East Terra Lane • O'Fallon, Missouri 63366 • (636)240-2400 • Fax (636)272-2408 • (800)325-6152 • Intl. Fax# (001)636-272-7546 • www.truemfg.com