TRUE FOOD SERVICE EQUIPMENT, INC.
2001 East Terra Lane • O'Fallon, Missouri 63366-4434 • (636)240-2400
Fax (636)272-2408 • Toll Free (800)325-6152 • Intl Fax# (001)636-272-7546
Parts Dept. (800)424-TRUE • Parts Dept. Fax# (636)272-9471 • www.truemfg.com

Project Name: _____
Location: _____
Item #: _____ *Qty:* _____
Model #: _____

AIA #
SIS #

Model:
TFM-51FL

Horizontal Freezer:
Glass Flat Lid

TFM-51FL

- True's horizontal freezers are uniquely designed to promote high-profit frozen novelties in high impulse retail traffic areas. Ideal for bolstering incremental sales of frozen merchandise and seasonal specialties.
- Cold wall, environmentally friendly (134A) refrigeration system. Maintains -10°F (-23.33°C), ideal for both ice cream and frozen food.
- Exterior - non-peel or chip white laminated vinyl, durable and permanent; with gray mitered plastic top and lid frames.
- Interior - NSF approved, white aluminum with stainless steel floor.
- Tempered, hard coated, "Low-E" glass slide lids. Reduces solar heat gain, enhances energy efficiency and minimizes condensation.
- Locks standard, provide security, prevents theft.
- Convenient defrost drain.
- 2½" (64 mm) diameter stem castors.
- Entire cabinet structure is foamed-in-place using Ecomate. A high density, polyurethane insulation that has zero ozone depletion potential (ODP) and zero global warming potential (GWP).

ROUGH-IN DATA

Specifications subject to change without notice.
Chart dimensions rounded up to the nearest ⅛" (millimeters rounded up to next whole number).

Model	Lids	Cabinet Dimensions (inches) (mm) L	D	H*	HP	Voltage	Amps	NEMA Config.	Cord Length (total ft.) (total m)	Crated Weight (lbs.) (kg)
TFM-51FL	2	51⅞ 1318	26⅛ 664	31⅝ 804	⅓ ⅓	115/60/1 230-240/50/1	4.1 2.0	5-15P	9 2.74	225 103

* Height does not include 3¼" (83 mm) for castors &⅞" (23mm) for lid handle.

8/14 Printed in U.S.A.

APPROVALS:

AVAILABLE AT:

Model:
TFM-51FL

Horizontal Freezer:
Glass Flat Lid

STANDARD FEATURES

DESIGN
- True's horizontal freezers are uniquely designed to promote high-profit frozen novelties in high impulse retail traffic areas. Ideal for bolstering incremental sales of frozen merchandise and seasonal specialties.

REFRIGERATION SYSTEM
- Factory engineered, self-contained, capillary tube system using environmentally friendly (CFC free) 134A refrigerant.
- Cold wall refrigeration system. Maintains -10° F (-23.33°C) cabinet temperature, ideal for both ice cream and frozen food.
- Condensing unit is accessed from behind grill on right side; slides out for easy maintenance.
- Manual defrost system; convenient drain located on front of cabinet.

CABINET CONSTRUCTION
- Exterior - non-peel or chip white laminated vinyl, durable and permanent; with gray mitered plastic top and lid frames.
- Interior - attractive, NSF approved, white aluminum liner; non-rust, peel or chip. Stainless steel floor.
- Insulation - entire cabinet structure is foamed-in-place using Ecomate. A high density, polyurethane insulation that has zero ozone depletion potential (ODP) and zero global warming potential (GWP).
- 2½" (64mm) diameter stem castors.

LIDS
- Tempered, hard coated, "Low-E", single pane glass slide lid assemblies. The latest in energy efficient technology; reduces solar heat gain and minimizes condensation.
- Designed for convenient access, fast service and attractive display.
- Lid lock standard.

MODEL FEATURES
- Self-contained, portable system. No plumbing required.
- Low profile design permits easier placement, saves aisle space.
- Interior mounted thermometer.
- NSF-7 compliant for open food product.

ELECTRICAL
- Unit completely pre-wired at factory and ready for final connection to a 115/60/1 phase, 15 amp dedicated outlet. Cord and plug set included.

115/60/1
NEMA-5-15R

OPTIONAL FEATURES/ACCESSORIES
Upcharge and lead times may apply.
- ❑ 230 - 240V / 50 Hz.
- ❑ Black vinyl exterior.
- ❑ Heavy duty novelty baskets (accommodates 4).
- ❑ Dividers for novelty baskets.

PLAN VIEW

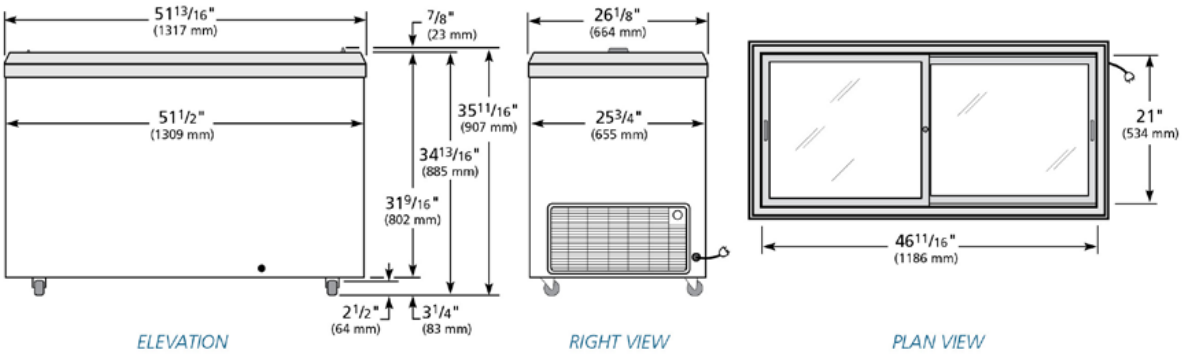

WARRANTY*
Three year warranty on all parts and labor and an additional 2 year warranty on compressor. (U.S.A. only)

*RESIDENTIAL APPLICATIONS: TRUE assumes no liability for parts or labor coverage for component failure or other damages resulting from installation in non-commercial or residential applications.

METRIC DIMENSIONS ROUNDED UP TO THE NEAREST WHOLE MILLIMETER

SPECIFICATIONS SUBJECT TO CHANGE WITHOUT NOTICE

Model	Elevation	Right	Plan	3D	Back
TFM-51FL	TFEY89E	TFEY78S	TFEY89P	TFEY893	TFEY89B

TRUE FOOD SERVICE EQUIPMENT
2001 East Terra Lane • O'Fallon, Missouri 63366-4434 • (636)240-2400 • Fax (636)272-2408 • Toll Free (800)325-6152 • Intl. Fax# (001)636-272-7546 • www.truemfg.com