TRUE FOOD SERVICE EQUIPMENT, INC.
2001 East Terra Lane • O'Fallon, Missouri 63366-4434 • (636)240-2400
Fax (636)272-2408 • Toll Free (800)325-6152 • Intl Fax# (001)636-272-7546
Parts Dept. (800)424-TRUE • Parts Dept. Fax# (636)272-9471 • www.truemfg.com

Project Name: _____
Location: _____
Item #: _____ *Qty:* _____
Model #: _____

AIA #
SIS #

Model:
TMC-58-S-SS

Milk Coolers:
Stainless Steel Exterior/Stainless Steel Interior

TMC-58-S-SS

- True's commitment to using the highest quality materials and oversized refrigeration systems provides the user with colder product temperatures, and lower utility costs in an attractive, durable school milk cooler.
- Oversized, forced-air refrigeration system maintains milk temperatures of 33°F to 38°F (.5°C to 3.3°C). Colder holding temperatures provide better tasting milk, increased sales and less product waste.
- Exterior - all stainless steel exterior front, sides, back and top.
- All stainless steel self-service doors feature convenient drop front and "hold-open" flip-up top. Standard with door locks.
- Interior - Stainless steel walls and reinforced floor.
- Standard with heavy duty floor racks and convenient clean out drain.
- Designed to hold Sixteen 13"L x 13"D x 11⅛"H (331 mm x 331 mm x 296 mm) milk crates.
- Entire cabinet structure is foamed-in-place using Ecomate. A new, innovative, high density, polyurethane insulation that has zero ozone depletion potential (ODP) and zero global warming potential (GWP).

ROUGH-IN DATA

Specifications subject to change without notice.
Chart dimensions rounded up to the nearest ⅛" (millimeters rounded up to next whole number).

Model	Doors	Capacity	Crate Dimensions (inches) (mm)			Floor Racks	Cabinet Dimensions (inches) (mm)			HP	Voltage	Amps	NEMA Config.	Cord Length (total ft.) (total m)	Crated Weight (lbs.) (kg)
		Crates	L	D	H		L**	D†	H*						
TMC-58-S-SS	2	16	13 331	13 331	11⅝ 296	3	58 1474	33⅜ 848	41½ 1055	⅓ ⅓	115/60/1 230-240/50/1	6.8 4.2	5-15P ▲	9 2.74	445 202

** Length does not include⅛" (4 mm) each side for lid pins.
† Depth does not include 1" (26 mm) for front bumpers.
* Height does not include 5⅛" (131 mm) for castors.

▲Plug type varies by country.

MADE IN U.S.A. SINCE 1945 · 5 YEAR COMPRESSOR WARRANTY USA · c UL us · NSF · CE

10/14 Printed in U.S.A.

APPROVALS:

AVAILABLE AT:

Model:

TMC-58-S-SS

Milk Coolers:

Stainless Steel Exterior/Stainless Steel Interior

STANDARD FEATURES

DESIGN

- True's commitment to using the highest quality materials and oversized refrigeration systems provides the user with colder product temperatures, and lower utility costs in an attractive, durable school milk cooler.

REFRIGERATION SYSTEM

- Factory engineered, self-contained, capillary tube system using environmentally friendly (CFC free) 134A refrigerant.
- Extra large evaporator coil balanced with higher horsepower compressor and large condenser; maintains milk temperatures of 33°F to 38°F (.5°C to 3.3°C). Colder holding temperatures provide better tasting milk, increased sales and less product waste.
- Sealed, cast iron, self-lubricating evaporator fan motor(s) and larger fan blades give True milk coolers a more efficient low velocity, high volume airflow design. This unique design ensures colder holding temperatures and faster recovery in high use situations.
- Condensing unit accessed from behind back grill, slides out for easy cleaning and maintenance.

CABINET CONSTRUCTION

- Exterior - all stainless steel front, sides, back and top.
- Interior - Stainless steel walls and reinforced floor. Standard with heavy duty floor racks.
- Insulation - entire cabinet structure is foamed-in-place using Ecomate. A new, innovative, high density, polyurethane insulation that has zero ozone depletion potential (ODP) and zero global warming potential (GWP).
- Welded, heavy duty steel frame rail, black powder coated for corrosion protection.
- Frame rail fitted with four (4) easy roll, 4" (102 mm) diameter swivel castors (front castors lock in place).
- Designed to hold Sixteen 13"L x 13"D x 11⅛"H (331 mm x 331 mm x 296 mm) milk crates.

DOORS

- All stainless steel self-service doors feature convenient drop front and "hold-open" flip-up top. Door support bumpers standard.
- Door locks standard.
- Magnetic door gaskets of one piece construction, removable without tools for ease of cleaning.

MODEL FEATURES

- Exterior digital temperature display.
- Evaporator is epoxy coated to eliminate the potential of corrosion.
- Convenient clean out drain with ½" (13 mm) NPT-PVC drain plug.
- Listed under NSF-7 for the storage and/or display of packaged or bottled product.

ELECTRICAL

- Unit completely pre-wired at factory and ready for final connection to a 115/60/1 phase, 15 amp dedicated outlet. Cord and plug set included.

115/60/1
NEMA-5-15R

OPTIONAL FEATURES/ACCESSORIES

Upcharge and lead times may apply.

- ❑ 230 - 240V / 50 Hz.
- ❑ A variety of exterior color options available, see www.truemfg.com for latest offerings.
- ❑ 6" (153 mm) standard legs (mounting plates required).
- ❑ 6" (153 mm) seismic/flanged legs (mounting plates required).
- ❑ Corner bumpers.
- ❑ See www.truemfg.com for school milk profit calculator.
- ❑ Remote cabinets (condensing unit supplied by others; system comes standard with 404A expansion valve and requires R404A refrigerant). Consult factory technical service department for BTU information. All remote units must be hard wired during installation.

PLAN VIEW

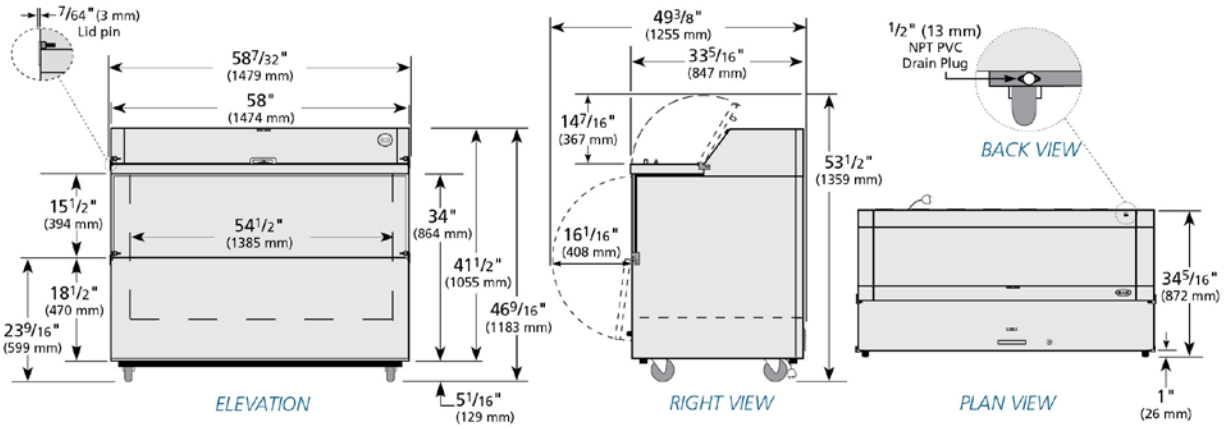

WARRANTY*
Three year warranty on all parts and labor and an additional 2 year warranty on compressor. (U.S.A. only)

*RESIDENTIAL APPLICATIONS: TRUE assumes no liability for parts or labor coverage for component failure or other damages resulting from installation in non-commercial or residential applications.

METRIC DIMENSIONS ROUNDED UP TO THE NEAREST WHOLE MILLIMETER

SPECIFICATIONS SUBJECT TO CHANGE WITHOUT NOTICE

Model	Elevation	Right	Plan	3D	Back
TMC-58-S-SS	TFQ061E	TFQ060S	TFQ061P	TFQ0613	

TRUE FOOD SERVICE EQUIPMENT

2001 East Terra Lane • O'Fallon, Missouri 63366-4434 • (636)240-2400 • Fax (636)272-2408 • Toll Free (800)325-6152 • Intl. Fax# (001)636-272-7546 • www.truemfg.com