TRUE FOOD SERVICE EQUIPMENT, INC.
2001 East Terra Lane • O'Fallon, Missouri 63366-4434 • (636)240-2400
Fax (636)272-2408 • Toll Free (800)325-6152 • Intl Fax# (001)636-272-7546
Parts Dept. (800)424-TRUE • Parts Dept. Fax# (636)272-9471 • www.truemfg.com

Project Name: _____
Location: _____
Item #: _____ *Qty:* _____
Model #: _____

AIA #
SIS #

Model:
TPP-93D-6

Food Prep Table:
Drawered Pizza Prep Table

Scan code for video

TPP-93D-6

- True's pizza prep tables are designed with enduring quality that protects your long term investment.
- Oversized, environmentally friendly (R134A) forced-air refrigeration system holds 33°F to 41°F (.5°C to 5°C).
- Complies with and listed under ANSI/NSF-7.
- All stainless steel front, top and ends. Matching aluminum finished back.
- Stainless steel, patented, foam insulated flat lids keep pan temperatures colder, lock in freshness, and minimize condensation.
- Extra-deep 19½" (496 mm) full length removable cutting board included. Sanitary, high density, NSF approved white polyethylene provides tough preparation surface.
- Each drawer accommodates two (2) full size 12"L x 20"W x 8"D (305 mm x 508 mm x 204 mm) pans (sold separately).
- Foamed-in-place using Ecomate. A high density, polyurethane insulation that has zero ozone depletion potential (ODP) and zero global warming potential (GWP).

ROUGH-IN DATA

Specifications subject to change without notice.
Chart dimensions rounded up to the nearest ⅛" (millimeters rounded up to next whole number).

Model	Drawers	Pans (top)	Cabinet Dimensions (inches) (mm) L**	D†	H*	HP	Voltage	Amps	NEMA Config.	Cord Length (total ft.) (total m)	Crated Weight (lbs.) (kg)
TPP-93D-6	6	12	93¼ 2369	32¼ 820	35¾ 909	½ ½	115/60/1 230-240/50/1	9.7 4.2	5-15P ▲	7 2.13	735 334

** Length does not include¼" (7 mm) each side for cutting board brackets and thumb screws.
† Depth does not include 1" (26 mm) for rear bumpers and 3" (77 mm) for cutting board.
* Height does not include 6¼" (159 mm) for castors or 6" (153 mm) for optional legs.

▲Plug type varies by country.

MADE IN USA SINCE 1945 · 5 YEAR COMPRESSOR WARRANTY USA · c UL us · NSF · CE

9/14 Printed in U.S.A.

APPROVALS:

AVAILABLE AT:

Model:

TPP-93D-6

Food Prep Table:
Drawered Pizza Prep Table

STANDARD FEATURES

DESIGN
- True's commitment to using the highest quality materials and oversized refrigeration systems provides the user with colder product temperatures, lower utility costs, exceptional food safety and the best value in today's food service marketplace.

REFRIGERATION SYSTEM
- Factory engineered, self-contained, capillary tube system using environmentally friendly (CFC free) 134A refrigerant.
- Oversized, factory balanced refrigeration system with guided airflow to provide uniform temperature in food pan rail and cabinet interior.
- Forced-air design holds 33°F to 41°F (.5°C to 5°C) product temperature in food pans and cabinet interior. Complies with and listed under ANSI/NSF-7.
- Condensing unit accessed from behind front removable panel, slides out for easy maintenance.

CABINET CONSTRUCTION
- Exterior - stainless steel front, top and ends. Matching aluminum finished back.
- Interior - attractive, NSF approved, white aluminum liner. Stainless steel floor with coved corners.
- Insulation - entire cabinet structure and drawer facings are foamed-in-place using Ecomate. A high density, polyurethane insulation that has zero ozone depletion potential (ODP) and zero global warming potential (GWP).
- 5" (127 mm) diameter stem castors. 36" (915 mm) work surface height.

DRAWERS
- Stainless steel exterior drawer facings and liners. Stainless steel drawer frames.
- Each drawer fitted with 12" (305 mm) long recessed handle that is foamed-in-place with a sheet metal interlock to ensure permanent attachment.
- Magnetic drawer gaskets of one piece construction, removable without tools for ease of cleaning.
- Heavy-duty stainless steel drawer slides and rollers. Removable without tools for easy cleaning.
- Each drawer accommodates two (2) full size 12"L x 20"W x 8"D (305 mm x 508 mm x 204 mm) food pans (sold separately). Drawer will support varying pan configurations with pan dividers bars (drawer pans and divider bars optional).

MODEL FEATURES
- Evaporator is epoxy coated to eliminate the potential of corrosion.
- Extra-deep 19½" (496 mm), full length removable cutting board included. Sanitary, high-density, NSF approved white polyethylene provides tough preparation surface.
- Stainless steel, patented, foam insulated flat lids keep pan temperatures colder, lock in freshness, and minimize condensation.
- Refrigerated pan rail comes standard with twelve (⅓size) 12¾"L x 6¼"W x 6"D (324 mm x 159 mm x 153 mm) NSF approved clear polycarbonate insert pans.
- NSF-7 compliant for open food product.

ELECTRICAL
- Unit completely pre-wired at factory and ready for final connection to a 115/60/1 phase, 15 amp dedicated outlet. Cord and plug set included.

115/60/1
NEMA-5-15R

OPTIONAL FEATURES/ACCESSORIES
Upcharge and lead times may apply.
- ❑ 230 - 240V / 50 Hz.
- ❑ 6" (153 mm) standard legs.
- ❑ 6" (153 mm) seismic/flanged legs.
- ❑ 4" (102 mm) diameter castors.
- ❑ 3" (85 mm) diameter castors.
- ❑ 2½" (64 mm) diameter castors.
- ❑ Garnish racks.
- ❑ 19½" (496 mm) deep, ¾" (19 mm) thick, white polyethylene cutting board.
- ❑ 19½" (496 mm) deep, ½" (13 mm) thick, composite cutting board.
- ❑ Pan dividers.
- ❑ Exterior round digital temperature display (factory installed).
- ❑ Remote cabinets (condensing unit supplied by others; system comes standard with 404A expansion valve and requires R404A refrigerant). Consult factory technical service department for BTU information. All remote units must be hard wired during installation.

PLAN VIEW

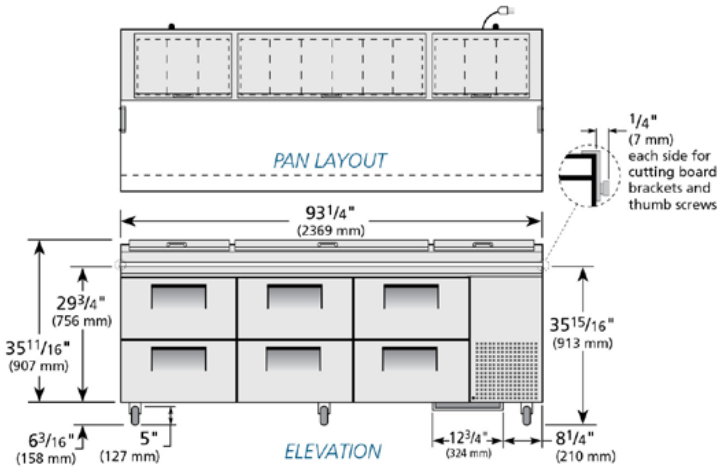

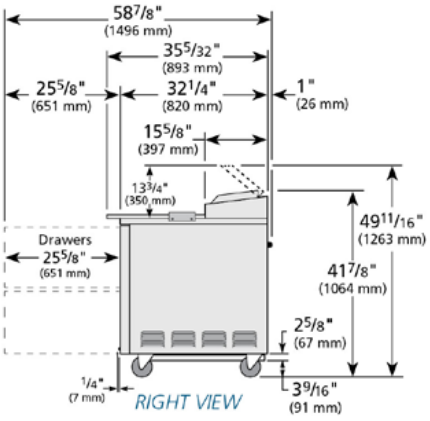

WARRANTY*
Three year warranty on all parts and labor and an additional 2 year warranty on compressor. (U.S.A. only)

*RESIDENTIAL APPLICATIONS: TRUE assumes no liability for parts or labor coverage for component failure or other damages resulting from installation in non-commercial or residential applications.

METRIC DIMENSIONS ROUNDED UP TO THE NEAREST WHOLE MILLIMETER

SPECIFICATIONS SUBJECT TO CHANGE WITHOUT NOTICE

Model	Elevation	Right	Plan	3D	Back
TPP-93D-6	TFQY43E	TFQY70S	TFQY43P	TFQY433	

TRUE FOOD SERVICE EQUIPMENT
2001 East Terra Lane • O'Fallon, Missouri 63366-4434 • (636)240-2400 • Fax (636)272-2408 • Toll Free (800)325-6152 • Intl. Fax# (001)636-272-7546 • www.truemfg.com