TRUE FOOD SERVICE EQUIPMENT, INC.
2001 East Terra Lane • O'Fallon, Missouri 63366
(636)240-2400 • Fax (636)272-2408 • (800)325-6152 • Intl Fax# (001)636-272-7546
Parts Dept. (800)424-TRUE • Parts Dept. Fax# (636)272-9471 • www.truemfg.com

Project Name: _____
Location: _____
Item #: _____ *Qty:* _____
Model #: _____

AIA #
SIS #

Model:
TSID-48-4

Display Cases:
Single Duty Refrigerated Deli Case

TSID-48-4

- True's commitment to using the highest quality materials and oversized refrigeration systems provides the user with colder product temperatures, and lower utility costs in an attractive self-service display case.
- Cabinet is NSF-7 certified to hold open food product.
- Oversized, factory balanced, refrigeration system holds 38°F to 40°F (3.3°C to 4.4°C). Gravity coil refrigeration system provides high humidty environment for exceptional preservation of meats and deli products.
- "Low-E", double pane thermal glass front display and self-closing rear doors provide maximum insulation value for greater efficiency and energy savings.
- Exterior - non-peel or chip white laminated vinyl; durable and permanent.
- Interior - attractive, NSF approved, white aluminum liner. Stainless steel floor with coved corners.
- Case is equipped with front and rear light sources for maximum product display. Fluorescent lamps are low UV emitting to enhance product appearance and increase shelf life.
- Automatic defrost system; time-initiated, time-terminated.
- Entire cabinet structure is foamed-in-place using Ecomate. A high density, polyurethane insulation that has zero ozone depletion potential (ODP) and zero global warming potential (GWP).

ROUGH-IN DATA

Specifications subject to change without notice.
Chart dimensions rounded up to the nearest ⅛" (millimeters rounded up to next whole number).

Model	Doors	Shelves	Cabinet Dimensions (inches) (mm) L	D†	H	HP	Voltage	Amps	NEMA Config.	Cord Length (total ft.) (total m)	Crated Weight (lbs.) (kg)
TSID-48-4	2 fr/ 2 bk	2	48½	29¼	50¼	⅓	115/60/1	7.6	5-15P	9	450
			1232	743	1277	⅓	230-240/50/1	4.0	▲	2.74	205

† Depth does not include ⅝" (16 mm) for rear door handles.

▲ Plug type varies by country.

8/14 Printed in U.S.A.

APPROVALS:

AVAILABLE AT:

Model:

TSID-48-4

Display Cases:
Single Duty Refrigerated Deli Case

STANDARD FEATURES

DESIGN
- True's commitment to using the highest quality materials and oversized refrigeration systems provides the user with colder product temperatures, and lower utility costs in an attractive self-service display case that brilliantly displays deli meats and cheese.

REFRIGERATION SYSTEM
- Factory engineered, self-contained, capillary tube system using environmentally friendly (CFC free) 134A refrigerant.
- Gravity coil refrigeration system provides high humidity environment for exceptional preservation of meats and deli products.
- Extra large evaporator coil balanced with higher horsepower compressor and large condenser; maintains cabinet temperatures of 38°F to 40°F (3.3°C to 4.4°C).
- Automatic defrost system; time-initiated, time-terminated.
- Condensing unit located behind grill in back of unit. Entire system slides out for easy cleaning and maintanance.

CABINET CONSTRUCTION
- Exterior - non-peel or chip laminated vinyl; white sides with black front and back grills.
- Stainless steel counter top provides surface for equipment such as registers and point-of-purchase novelties.
- Interior - attractive, NSF approved, white aluminum liner. Stainless steel floor with coved corners.
- Insulation - entire cabinet structure is foamed-in-place using Ecomate. A high density, polyurethane insulation that has zero ozone depletion potential (ODP) and zero global warming potential (GWP).
- Welded, heavy duty steel frame rail, black powder coated for corrosion protection.
- Frame rail fitted with leg levelers.

DOORS
- Front and rear door assemblies feature "Low-E", double pane thermal insulated glass. The latest in energy efficient technology.
- Each door fitted with 12" (305 mm) long handle.
- Self-closing doors. Sliding doors ride on stainless steel V-Channel with stainless steel bearings for smooth, even, positive closure. Doors fit within plastic channel frame.
- Front glass doors slanted 12.52° to minimize reflection from overhead lighting enhancing your cold product presentations.

SHELVING
- Two (2) adjustable, heavy duty PVC coated wire shelves. Top shelf dimension is 43 ¾"L x 17 ½" D (1112 mm x 445 mm). Bottom shelf dimension is 43 ¾"L x 19" D (1112 mm x 483 mm). Four (4) chrome plated shelf clips included per shelf.
- Aluminum shelf support pilasters. Shelves are adjustable on ½" (13 mm) increments.

LIGHTING
- Case equipped with front and rear light sources for maximum product display. Fluorescent lamps are low UV emitting to enhance product appearance and increase shelf life.
- Cabinet lighting utilizes electronic ballast and T-8 bulbs for brighter illumination, longer bulb life and increased energy efficiency. Lamps are safety shielded.

MODEL FEATURES
- Evaporator is epoxy coated to eliminate the potential of corrosion.
- NSF-7 compliant for open food product.

ELECTRICAL
- Unit completely pre-wired at factory and ready for final connection to a 115/60/1 phase, 15 amp dedicated outlet. Cord and plug set included.

115/60/1
NEMA-5-15R

RECOMMENDED OPERATING CONDITIONS
- TSID refrigerated models are designed to operate in an environment where temperatures and humidity do not exceed 75°F (24°C) and 55% relative humidity.

OPTIONAL FEATURES/ACCESSORIES
Upcharge and lead times may apply.
- ❑ 230 - 240V / 50 Hz.
- ❑ 6" (153 mm) standard legs.
- ❑ 6" (153 mm) seismic/flanged legs.
- ❑ 2 ½" (64 mm) diameter castors.
- ❑ 4" (102 mm) diameter castors.
- ❑ Ratchet locks (requires 2).
- ❑ Additional shelves.
- ❑ Low height models with 41 ¾" (1061 mm) work surface height.
- ❑ Remote cabinets (condensing unit supplied by others; system comes standard with 404A expansion valve and requires R404A refrigerant). Consult factory technical service department for BTU information. All remote units must be hard wired during installation.

PLAN VIEW

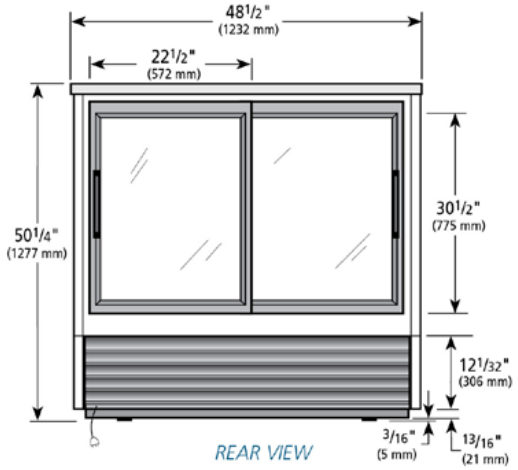

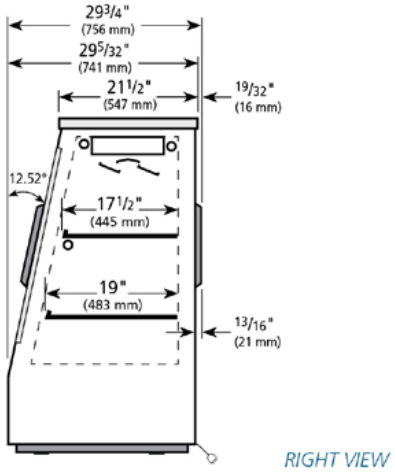

WARRANTY*
Three year warranty on all parts and labor and an additional 2 year warranty on compressor. (U.S.A. only)

*RESIDENTIAL APPLICATIONS: TRUE assumes no liability for parts or labor coverage for component failure or other damages resulting from installation in non-commercial or residential applications.

METRIC DIMENSIONS ROUNDED UP TO THE NEAREST WHOLE MILLIMETER

SPECIFICATIONS SUBJECT TO CHANGE WITHOUT NOTICE

Model	Elevation	Right	Plan	3D	Back
TSID-48-4	TFQY30E	TFQY46S	TFQY30P	TFQY303	

TRUE FOOD SERVICE EQUIPMENT
2001 East Terra Lane • O'Fallon, Missouri 63366-4434 • (636)240-2400 • Fax (636)272-2408 • Toll Free (800)325-6152 • Intl. Fax# (001)636-272-7546 • www.truemfg.com