TRUE FOOD SERVICE EQUIPMENT, INC.
2001 East Terra Lane • O'Fallon, Missouri 63366-4434 • (636)240-2400
Fax (636)272-2408 • Toll Free (800)325-6152 • Intl Fax# (001)636-272-7546
Parts Dept. (800)424-TRUE • Parts Dept. Fax# (636)272-9471 • www.truemfg.com

Project Name: _____
Location: _____
Item #: _____ Qty: _____
Model #: _____

AIA #
SIS #

Model:
TUC-27F-ADA

Undercounter:
ADA Compliant Solid Door Freezer

TUC-27F-ADA

- True's undercounter units are designed with enduring quality that protects your long term investment.
- Designed using the highest quality materials and components to provide the user with colder product temperatures, lower utility costs, exceptional food safety and the best value in today's food service marketplace.
- 3" (77 mm) diameter stem castors standard. 34" (864 mm) work surface height. Complies with the Americans with Disabilities Act (ADA) requirements.
- Oversized, environmentally friendly (134A) forced-air refrigeration system holds -10°F (-23.3°C). Ideally suited for both frozen foods and ice cream.
- All stainless steel front, top and ends. Matching aluminum finished back.
- Front breathing.
- Heavy duty PVC coated wire shelves.
- Automatic defrost system time-initiated, time-terminated.
- Foamed-in-place using Ecomate. A high density, polyurethane insulation that has zero ozone depletion potential (ODP) and zero global warming potential (GWP).

ROUGH-IN DATA

Specifications subject to change without notice.
Chart dimensions rounded up to the nearest ⅛" (millimeters rounded up to next whole number).

Model	Doors	Shelves	Cabinet Dimensions (inches) (mm) L	D†	H*	Counter Height	HP	Voltage	Amps	NEMA Config.	Cord Length (total ft.) (total m)	Crated Weight (lbs.) (kg)
TUC-27F-ADA	1	2	27⅝ 702	30⅛ 766	29¾ 756	34	⅓ ⅓	115/60/1 230-240/50/1	4.8 3.4	5-15P ▲	7 2.13	200 91

† Depth does not include 1" (26 mm) for rear bumpers.
* Height does not include 4" (102 mm) for castors.
Note: The TUC-27F-ADA 230-240V /50 HZ. uses 404A Refrigerant not 134A.

▲Plug type varies by country.

MADE IN U.S.A. SINCE 1945 · 5 YEAR COMPRESSOR WARRANTY USA · c UL us · NSF · CE

8/14 Printed in U.S.A.

APPROVALS:

AVAILABLE AT:

Model:

TUC-27F-ADA

Undercounter:

ADA Compliant Solid Door Freezer

STANDARD FEATURES

DESIGN

- True's commitment to using the highest quality materials and oversized refrigeration systems provides the user with colder product temperatures, lower utility costs, exceptional food safety and the best value in today's food service marketplace.

REFRIGERATION SYSTEM

- Factory engineered, self-contained, capillary tube system using environmentally friendly (CFC free) 134A refrigerant.
- Factory engineered, self-contained, capillary tube system using environmentally friendly (CFC free) 134A refrigerant.
- Extra large evaporator coil balanced with higher horsepower compressor and large condenser; maintains -10°F (-23.3°C) cabinet temperatures. Ideally suited for both frozen foods and ice cream.
- Sealed, cast iron, self-lubricating evaporator fan motor and larger fan blades give True undercounter units a more efficient, low velocity, high volume airflow design. This unique design ensures faster temperature recovery and shorter run times in the busiest of food service environments.
- Condensing unit access in back of cabinet, slides out for easy maintenance.
- Automatic defrost system time-initiated, time-terminated.

CABINET CONSTRUCTION

- Exterior - stainless steel front, top and ends. Matching aluminum finished back.
- Interior - attractive, NSF approved, white aluminum liner. Stainless steel floor with coved corners.
- Insulation - entire cabinet structure and solid door are foamed-in-place using Ecomate. A high density, polyurethane insulation that has zero ozone depletion potential (ODP) and zero global warming potential (GWP).
- 3" (77 mm) diameter stem castors. 34" (864 mm) work surface height. Compliant with American Disablities Act (ADA) requirements.

DOOR

- Stainless steel exterior with white aluminum liner to match cabinet interior.
- Door fitted with 12" (305 mm) long recessed handle that is foamed-in-place with a sheet metal interlock to ensure permanent attachment.
- Positive seal self-closing door with 90° stay open feature. Doors swing within cabinet dimensions.
- Magnetic door gaskets of one piece construction, removable without tools for ease of cleaning.

SHELVING

- Two (2) adjustable, heavy duty PVC coated wire shelves 23¼"L x 16"D (591 mm x 407 mm). Four (4) chrome plated shelf clips included per shelf.
- Shelf support pilasters made of same material as cabinet interior; shelves are adjustable on ½" (13 mm) increments.

COUNTERTOP PAN CAPACITY

- Comes standard with 16 (⅙size) 6⅞"L x 6¼"W x 4"D (175 mm x 159 mm x 102 mm) clear polycarbonate, NSF approved, food pans in countertop prep area. Also accommodates 6" (153 mm) and 8" (204 mm) deep food pans (supplied by others).
- Countertop pan opening designed to fit varying size pan configurations with available pan divider bars. Varying size pans supplied by others.

MODEL FEATURES

- Evaporator is epoxy coated to eliminate the potential of corrosion.
- NSF-7 compliant for open food product.

ELECTRICAL

- Unit completely pre-wired at factory and ready for final connection to a 115/60/1 phase, 15 amp dedicated outlet. Cord and plug set included.

115/60/1
NEMA-5-15R

OPTIONAL FEATURES/ACCESSORIES

Upcharge and lead times may apply.

- ❑ 230 - 240V / 50 Hz.
- ❑ 6" (153 mm) standard legs.
- ❑ 6" (153 mm) seismic/flanged legs.
- ❑ 5" (127 mm) diameter stem casters.
- ❑ Single overshelf.
- ❑ Double overshelf.
- ❑ Stacking collar.
- ❑ 30" (762 mm) deep, ½" (13 mm) thick, white polyethylene cutting board. Requires "L" brackets.
- ❑ 30" (762 mm) deep, ½" (13 mm) thick, composite cutting board. Requires "L" brackets.
- ❑ Heavy duty 16 gauge tops.
- ❑ Exterior rectangular digital temperature display (factory installed).
- ❑ Low profile models with 31⅞" (810 mm) work surface height.

PLAN VIEW

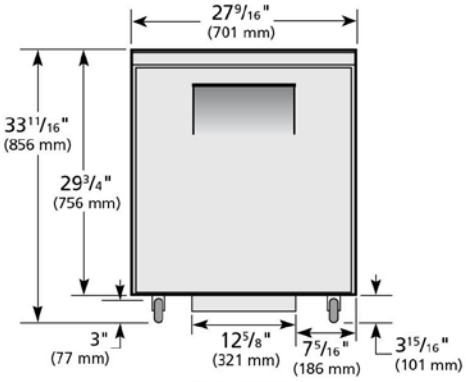

ELEVATION

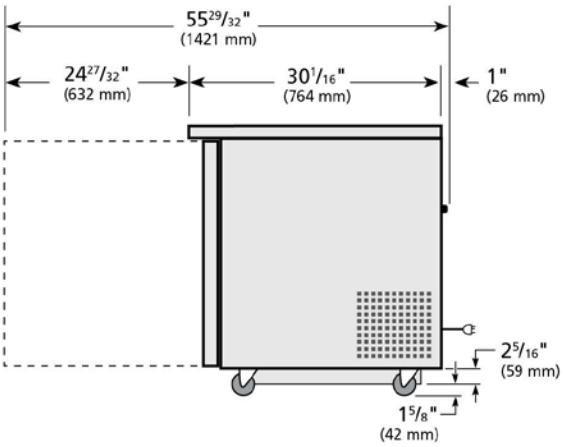

RIGHT VIEW

WARRANTY*
Three year warranty on all parts and labor and an additional 2 year warranty on compressor. (U.S.A. only)

*RESIDENTIAL APPLICATIONS: TRUE assumes no liability for parts or labor coverage for component failure or other damages resulting from installation in non-commercial or residential applications.

METRIC DIMENSIONS ROUNDED UP TO THE NEAREST WHOLE MILLIMETER

SPECIFICATIONS SUBJECT TO CHANGE WITHOUT NOTICE

Model	Elevation	Right	Plan	3D	Back
TUC-27F-ADA	TFQY016E	TFQY016S	TFQY01P	TFQY0163	

TRUE FOOD SERVICE EQUIPMENT

2001 East Terra Lane • O'Fallon, Missouri 63366-4434 • (636)240-2400 • Fax (636)272-2408 • Toll Free (800)325-6152 • Intl. Fax# (001)636-272-7546 • www.truemfg.com