TRUE FOOD SERVICE EQUIPMENT, INC.
2001 East Terra Lane • O'Fallon, Missouri 63366
(636)240-2400 • Fax (636)272-2408 • (800)325-6152 • Intl Fax# (001)636-272-7546
Parts Dept. (800)424-TRUE • Parts Dept. Fax# (636)272-9471 • www.truemfg.com

Project Name: _____
Location: _____
Item #: _____ *Qty:* _____
Model #: _____

AIA #
SIS #

Model:
TUC-48F

Undercounter:
Solid Door Freezer

Scan code for video

TUC-48F

- True's undercounter units are designed with enduring quality that protects your long term investment.
- Designed using the highest quality materials and components to provide the user with colder product temperatures, lower utility costs, exceptional food safety and the best value in today's food service marketplace.
- Oversized, environmentally friendly (R404A) forced-air refrigeration system holds -10°F (-23.3°C). Ideally suited for both frozen foods and ice cream.
- All stainless steel front, top and ends. Matching aluminum finished back.
- Front breathing.
- Heavy duty PVC coated wire shelves.
- Automatic defrost system time-initiated, time-terminated.
- Foamed-in-place using Ecomate. A high density, polyurethane insulation that has zero ozone depletion potential (ODP) and zero global warming potential (GWP).

ROUGH-IN DATA

Specifications subject to change without notice.
Chart dimensions rounded up to the nearest ⅛" (millimeters rounded up to next whole number).

Model	Doors	Shelves	Cabinet Dimensions (inches) (mm) L	D†	H*	HP	Voltage	Amps	NEMA Config.	Cord Length (total ft.) (total m)	Crated Weight (lbs.) (kg)
TUC-48F	2	4	48⅜	30⅛	29¾	¼	115/60/1	6.1	5-15P	7	290
			1229	766	756	½	230-240/50/1	5.1	▲	2.13	132

† Depth does not include 1" (26 mm) for rear bumpers.
* Height does not include 6¼" (159 mm) for castors or 6" (153 mm) for optional legs.

▲Plug type varies by country.

MADE IN USA SINCE 1945 · 5 YEAR COMPRESSOR WARRANTY USA · UL · ENERGY UL LISTED · NSF · CE

8/14 Printed in U.S.A.

APPROVALS:

AVAILABLE AT:

Model:

TUC-48F

Undercounter:
Solid Door Freezer

STANDARD FEATURES

DESIGN
- True's commitment to using the highest quality materials and oversized refrigeration systems provides the user with colder product temperatures, lower utility costs, exceptional food safety and the best value in today's food service marketplace.

REFRIGERATION SYSTEM
- Factory engineered, self-contained, capillary tube system using environmentally friendly (CFC free) R404A refrigerant.
- Oversized, factory balanced refrigeration system with guided airflow to provide uniform product temperatures.
- Extra large evaporator coil balanced with higher horsepower compressor and large condenser; maintains -10°F (-23.3°C) cabinet temperatures. Ideally suited for both frozen foods and ice cream.
- Sealed, cast iron, self-lubricating evaporator fan motor(s) and larger fan blades give True undercounter units a more efficient, low velocity, high volume airflow design. This unique design ensures faster temperature recovery and shorter run times in the busiest of food service environments.
- Condensing unit access in back of cabinet, slides out for easy maintenance.
- Automatic defrost system time-initiated, time-terminated.

CABINET CONSTRUCTION
- Exterior - stainless steel front, top and cabinet ends. Matching aluminum finished back.
- Insulation - entire cabinet structure and solid doors are foamed-in-place using Ecomate. A high density, polyurethane insulation that has zero ozone depletion potential (ODP) and zero global warming potential (GWP).
- 5" (127 mm) diameter stem castors - locks provided on front set. 36" (915 mm) work surface height.

DOORS
- Stainless steel exterior with white aluminum liner to match cabinet interior.
- Each door fitted with 12" (305 mm) long recessed handle that is foamed-in-place with a sheet metal interlock to ensure permanent attachment.
- Positive seal self-closing door(s) with 90°stay open feature. Door(s) swing within cabinet dimensions.
- Magnetic door gasket(s) of one piece construction, removable without tools for ease of cleaning.

SHELVING
- Four (4) adjustable, heavy duty PVC coated wire shelves 21 9/16"L x 16"D (548 mm x 407 mm). Four (4) chrome plated shelf clips included per shelf.
- Shelf support pilasters made of same material as cabinet interior; shelves are adjustable on ½" (13 mm) increments.

MODEL FEATURES
- Evaporator is epoxy coated to eliminate the potential of corrosion.
- NSF-7 compliant for open food product.

ELECTRICAL
- Unit completely pre-wired at factory and ready for final connection to a 115/60/1 phase, 15 amp dedicated outlet. Cord and plug set included.

115/60/1
NEMA-5-15R

OPTIONAL FEATURES/ACCESSORIES
Upcharge and lead times may apply.
- ❑ 230 - 240V / 50 Hz.
- ❑ 6" (153 mm) standard legs.
- ❑ 6" (153 mm) seismic/flanged legs.
- ❑ 2½" (64 mm) diameter castors.
- ❑ Single overshelf.
- ❑ Double overshelf.
- ❑ Stacking collar.
- ❑ 30" (762 mm) deep, ½" (13 mm) thick, white polyethylene cutting board. Requires "L" brackets.
- ❑ 30" (762 mm) deep, ½" (13 mm) thick, composite cutting board. Requires "L" brackets.
- ❑ Heavy duty 16 gauge tops.
- ❑ Exterior rectangular digital temperature display (factory installed).
- ❑ ADA compliant models with 34" (864 mm) work surface height.
- ❑ Low profile models with 31 7/8" (810 mm) work surface height.
- ❑ Remote cabinets (condensing unit supplied by others; system comes standard with 404A expansion valve and requires R404A refrigerant). Consult factory technical service department for BTU information. All remote units must be hard wired during installation.

PLAN VIEW

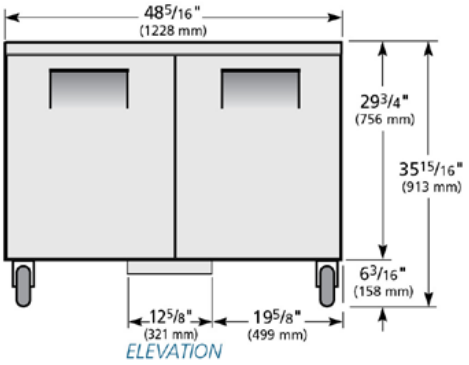

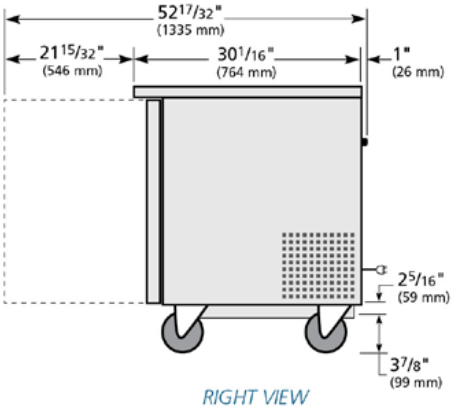

WARRANTY*
Three year warranty on all parts and labor and an additional 2 year warranty on compressor. (U.S.A. only)

*RESIDENTIAL APPLICATIONS: TRUE assumes no liability for parts or labor coverage for component failure or other damages resulting from installation in non-commercial or residential applications.

METRIC DIMENSIONS ROUNDED UP TO THE NEAREST WHOLE MILLIMETER

SPECIFICATIONS SUBJECT TO CHANGE WITHOUT NOTICE

Model	Elevation	Right	Plan	3D	Back
TUC-48F	TFQY02E	TFQY02S	TFQY02P	TFQY023	

TRUE FOOD SERVICE EQUIPMENT
2001 East Terra Lane • O'Fallon, Missouri 63366-4434 • (636)240-2400 • Fax (636)272-2408 • Toll Free (800)325-6152 • Intl. Fax# (001)636-272-7546 • www.truemfg.com