TRUE FOOD SERVICE EQUIPMENT, INC.
2001 East Terra Lane • O'Fallon, Missouri 63366
(636)240-2400 • Fax (636)272-2408 • (800)325-6152 • Intl Fax# (001)636-272-7546
Parts Dept. (800)424-TRUE • Parts Dept. Fax# (636)272-9471 • www.truemfg.com

Project Name: _____
Location: _____
Item #: _____ *Qty:* _____
Model #: _____

AIA #
SIS #

Model:
TWT-60D-2

Worktop:
Drawered Refrigerator

TWT-60D-2

- True's worktop units are designed with enduring quality that protects your long term investment.
- Designed using the highest quality materials and components to provide the user with colder product temperatures, lower utility costs, exceptional food safety and the best value in today's food service marketplace.
- Oversized, environmentally friendly (134A) forced-air refrigeration system holds 33°F to 38°F (.5°C to 3.3°C).
- All stainless steel front, top and ends. Matching aluminum finished back. Top and backsplash - one piece formed construction. Bacteria and food particles cannot be trapped underneath as with other two-piece worktop units.
- Front breathing.
- Each drawer accommodates one (1) full size 12"L x 20"W x 6"D (305 mm x 508 mm x 153 mm) food pan (sold separately).
- Heavy duty PVC coated wire shelves.
- Foamed-in-place using Ecomate. A new, innovative, high density, polyurethane insulation that has zero ozone depletion potential (ODP) and zero global warming potential (GWP).

ROUGH-IN DATA

Specifications subject to change without notice.
Chart dimensions rounded up to the nearest ⅛" (millimeters rounded up to next whole number).

Model	Doors	Drawers	Shelves	Cabinet Dimensions (inches) (mm) L	D†	H*	HP	Voltage	Amps	NEMA Config.	Cord Length (total ft.) (total m)	Crated Weight (lbs.) (kg)
TWT-60D-2	1	2	2	60⅜ 1534	30⅛ 766	33⅜ 848	⅕ ⅓	115/60/1 230-240/50/1	5.1 4.2	5-15P ▲	7 2.13	N/A N/A

† Depth does not include 1" (26 mm) for rear bumpers.
* Height does not include 6¼" (159 mm) for castors or 6" (153 mm) for optional legs.

▲Plug type varies by country.

Printed in U.S.A.

APPROVALS:

AVAILABLE AT:

Model:

TWT-60D-2

Worktop:

Drawered Refrigerator

STANDARD FEATURES

DESIGN

- True's commitment to using the highest quality materials and oversized refrigeration systems provides the user with colder product temperatures, lower utility costs, exceptional food safety and the best value in today's food service marketplace.

REFRIGERATION SYSTEM

- Factory engineered, self-contained, capillary tube system using environmentally friendly (CFC free) 134A refrigerant.
- Oversized, factory balanced refrigeration system with guided airflow to provide uniform product temperatures.
- Extra large evaporator coil balanced with higher horsepower compressor and large condenser; maintains cabinet temperatures of 33°F to 38°F (.5°C ot 3.3°C) for the best in food preservation.
- Sealed, cast iron, self-lubricating evaporator fan motor(s) and larger fan blades give True worktop units a more efficient, low velocity, high volume airflow design. This unique design ensures faster temperature recovery and shorter run times in the busiest of foodservice environments.
- Condensing unit access in back of cabinet, slides out for easy maintenance.

CABINET CONSTRUCTION

- Exterior - stainless steel front, top and ends. Matching aluminum finished back. Top and backsplash are one piece formed construction. Bacteria and food particles cannot be trapped underneath as with other two-piece worktop units.
- Interior - attractive, NSF approved, white aluminum liner. 300 series stainless steel floor with coved corners.
- Insulation - entire cabinet structure, solid door, and drawer facings are foamed-in-place using Ecomate. A new, innovative, high density, polyurethane insulation that has zero ozone depletion potential (ODP) and zero global warming potential (GWP).
- 5" (127 mm) diameter stem castors - locks provided on front set. 36" (915 mm) work surface height.

DOOR / DRAWERS

- Door constructed of stainless steel exterior with white aluminum liner to match cabinet interior. Drawers have stainless steel exterior facings and liners with stainless steel frames.
- Each door and drawer fitted with 12" (305 mm) long recessed handle that is foamed-in-place with a sheet metal interlock to ensure permanent attachment.
- Door section - positive seal self-closing door(s) with 90°stay open feature. Door(s) swing within cabinet dimensions.
- Magnetic drawer/door gaskets of one piece construction, removable without tools for ease of cleaning.
- Door or drawer assemblies can be located in any section of the cabinet. Location of door/drawers must be indicated at time of ordering.
- Drawer section - Heavy-duty stainless steel drawer slides and rollers, removable without tools for easy cleaning.
- Each drawer accommodates one (1) full size 12"L x 20"W x 6"D (305 mm x 208 mm x 153 mm) food pan (sold separately). Drawer will support varying size pan configurations with pan divider bars (drawer pans and divider bars optional).

SHELVING

- Two (2) adjustable, heavy duty PVC coated wire shelves 27½"L x 16"D (699 mm x 407 mm). Four (4) chrome plated shelf clips included per shelf.
- Shelf support pilasters made of same material as cabinet interior; shelves are adjustable on ½" (13 mm) increments.

MODEL FEATURES

- Evaporator is epoxy coated to eliminate the potential of corrosion.
- NSF-7 compliant for open food product.

ELECTRICAL

- Unit completely pre-wired at factory and ready for final connection to a 115/60/1 phase, 15 amp dedicated outlet. Cord and plug set included.

115/60/1
NEMA-5-15R

OPTIONAL FEATURES/ACCESSORIES

Upcharge and lead times may apply.

- ❑ 230 - 240V / 50 Hz.
- ❑ 6" (153 mm) standard legs.
- ❑ 6" (153 mm) seismic/flanged legs.
- ❑ 2½" (64 mm) diameter castors.
- ❑ Barrel lock available for door section (factory installed).
- ❑ Single overshelf.
- ❑ Double overshelf.
- ❑ 28¼" (718 mm) deep, ½" (13 mm) thick, white polyethylene cutting board. Requires "L" brackets.
- ❑ 28¼" (718 mm) deep, ½" (13 mm) thick, composite cutting board. Requires "L" brackets.
- ❑ Heavy duty, 16 gauge tops.
- ❑ Exterior rectangular digital temperature display (factory installed).
- ❑ ADA compliant models with 34" (864 mm) work surface height.
- ❑ Remote cabinets (condensing unit supplied by others; system comes standard with 404A expansion valve and requires R404A refrigerant). Consult factory technical service department for BTU information. All remote units must be hard wired during installation.

PLAN VIEW

CUBIC FEET	15.9

* Based on ANSI/AHAM HRF-1-2004

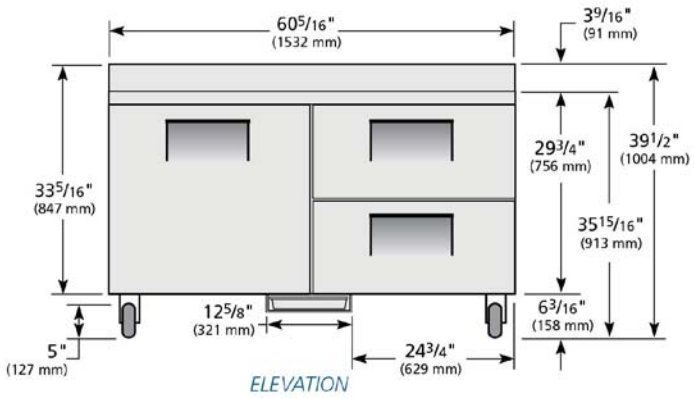

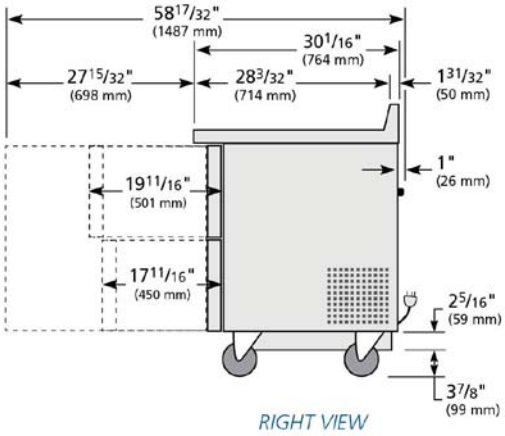

WARRANTY
One year warranty on all parts and laborand an additional 4 year warranty on compressor. (U.S.A. only)

METRIC DIMENSIONS ROUNDED UP TO THE NEAREST WHOLE MILLIMETER

SPECIFICATIONS SUBJECT TO CHANGE WITHOUT NOTICE

Model	Elevation	Right	Plan	3D	Back
TWT-60D-2	TFPY78E	TFPY78S	TFPY78P	TFPY783	

TRUE FOOD SERVICE EQUIPMENT

2001 East Terra Lane • O'Fallon, Missouri 63366 • (636)240-2400 • Fax (636)272-2408 • (800)325-6152 • Intl. Fax# (001)636-272-7546 • www.truemfg.com