T&S BRASS AND BRONZE WORKS, INC.

2 Saddleback Cove / P.O. Box 1088
Travelers Rest, SC 29690

Travelers Rest, SC: 800-476-4103 Simi Valley, CA: 800-423-0150 Fax: 864-834-3518 www.tsbrass.com

REG. #A2601
ISO #9001

Model No.
B-3960

Item No.

This Space for Architect/Engineer Approval

Job Name_____Date_____

Model Specified_____ Quantity_____

Customer/Wholesaler_____

Contractor_____

Architect/Engineer_____

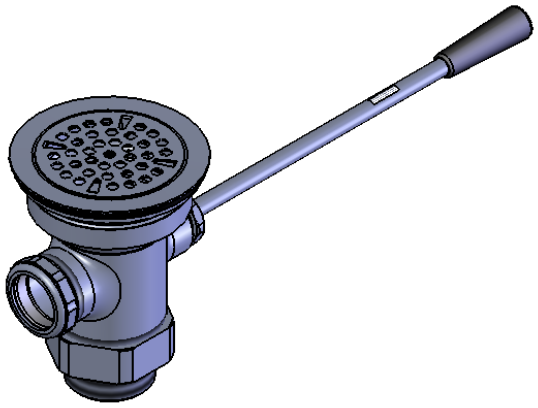

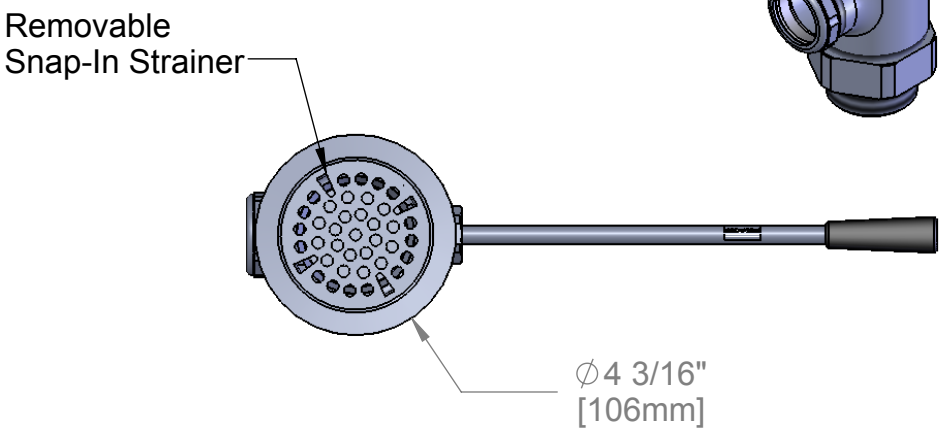

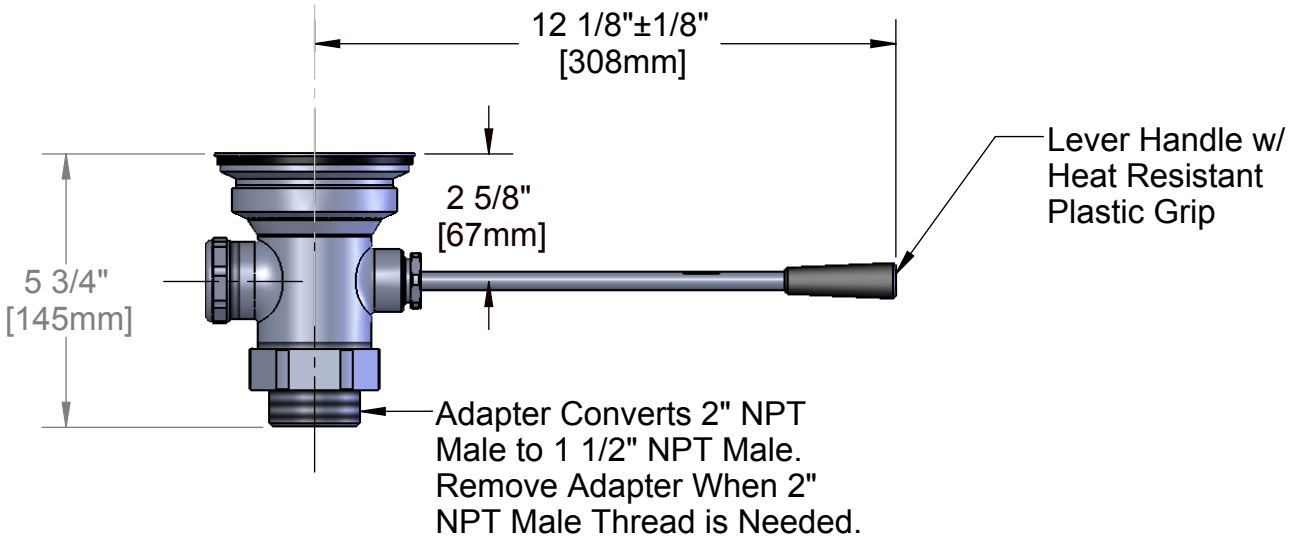

Product Specifications:

Waste Drain Valve w/ Lever Handle, 3" Sink Opening,
2" NPT Male Outlet & 1 1/2" NPT Male Adapter

Drawn	Checked	Approved
DHL	JRM	JHB
Scale: 1:4		Date: 3/19/07

T&S BRASS AND BRONZE WORKS, INC.

2 Saddleback Cove / P.O. Box 1088
Travelers Rest, SC 29690

REG. #A2601
ISO #9001

Travelers Rest, SC: 800-476-4103 Simi Valley, CA: 800-423-0150 Fax: 864-834-3518 www.tsbrass.com

Model No.
B-3960

Item No.

ITEM NO.	SALES NO.	DESCRIPTION
1	010389-45	O-Ring, Plunger
2	010390-45	Ferrule, Coupling Nut
3	010391-45	Nut, Coupling For Twist Drain
4	015305-45	Gasket, 3" Face Flange
5	015306-45	Flange, 3" Face
6	015307-45	Strainer, 3" Snap-in
7	015405-45	Plunger Casting For Lever Waste Drain
8	010394-45	Handle Asm, Waste Drain Valve Lever
9	010392-45	Bushing, Waste Drain Lever Handle
10	B-3945	Adapter, 2" NPT x 1 1/2" NPT

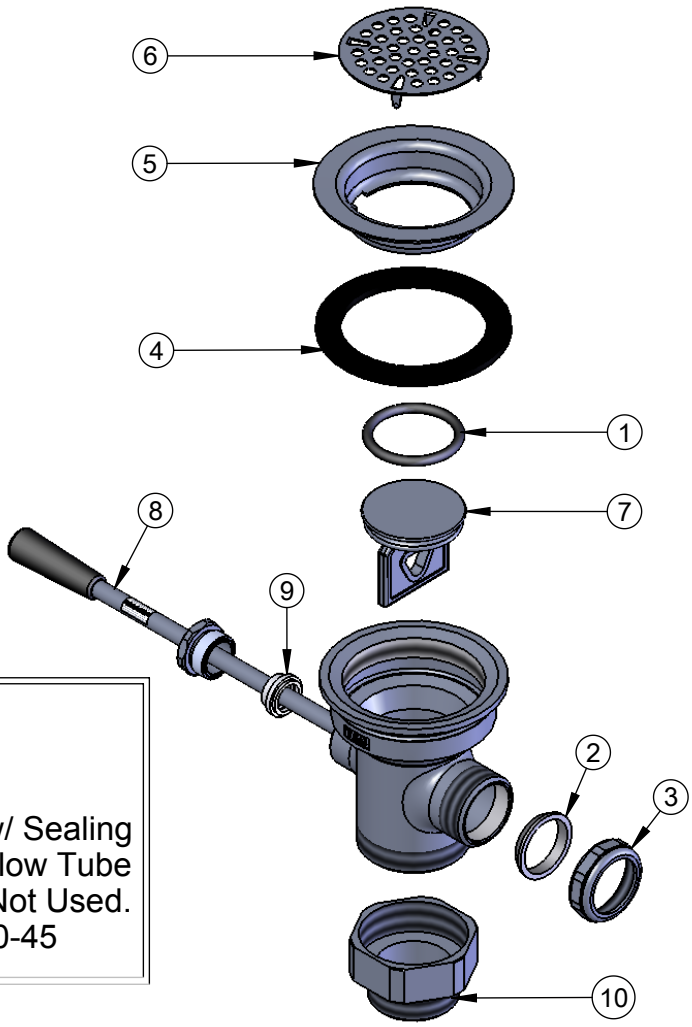

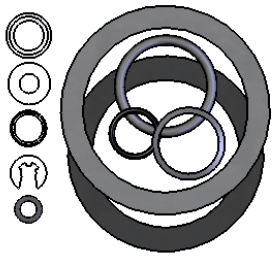

Washers, O-Rings & Gaskets are included in Parts Kit B-39K

Also Furnished w/ Sealing Cap When Overflow Tube Coupling Nut is Not Used. PN# 012640-45

Product Specifications:

Waste Drain Valve w/ Lever Handle, 3" Sink Opening, 2" NPT Male Outlet & 1 1/2" NPT Male Adapter

Drawn	Checked	Approved
DHL	JRM	JHB
Scale: 1:4		Date: 3/19/07