REFRIGERATOR MANUFACTURER
Turbo air
more durable,convenient,beautiful

1250 Victoria St
Carson, CA 90746
Tel. 310-900-1000
Fax. 310-900-1077
www.turboairinc.com

Project :	
Model # :	
Item # :	Qty :
Available W/H :	
Approval :	

Bottle Coolers

Underbar Equipment
Bottle Coolers

EXCEPTIONAL 3 YEAR PARTS & LABOR WARRANTY

Model : TBC-80SD/SB

TBC-80SD

TBC-80SB

- 2 Year Parts and Labor Warranty for SB Unit

FEATURES / BENEFITS

- **Efficient Refrigeration System**
  Turbo Air's refrigerators are designed with oversized and balanced R-134A (CFC Free) refrigeration systems. Theses include efficient evaporators and condensers for faster cooling and greater efficiency.

- **Forced Air Cooling System**
  Positive guided forced air cooling system chills bottles on top first.

- **Stainless Steel Cabinet Construction**
  Super Deluxe (SD) models boast a stainless steel exterior (except galvanized steel back and bottom). SB models are attractive wear-resistant black vinyl exterior. Heavy gauge stainless steel countertop and glide lids are perfect for sanitation and durability. Interior is stainless steel floor with white painted galvanized steel inside walls. Turbo Air Bottle Cooler model guarantees utmost in cleanliness and long product life. It also can add a touch of style to the most refined setting.

- **High-Density Polyurethane Insulation**
  The entire cabinet structure is foamed-in-place using high density, CFC free polyurethane insulation.

- **Adjustable, Heavy Duty, PE (polyethylene) Coated Dividers**
  Heavy duty 10mm thick pure grade PE coated adjustable bin dividers are provided for maximum storage use.

- **Rugged Built-in Removable Bottle Cap Opener and Cap Catcher**

- **Side Mount Compressor Unit**
  Through positioning the compressor to the side, the refrigerator can be serviced without being moved. By innovatively creating a front breathing feature, this model can provide high efficiency in narrow spaces.

- **Huge Capacity Cooler Cabinet Requires Only Minimum Floor Space**

- **Refrigerator Holds 33°F ~ 38°F for the Best in Beverage Preservation**

Model	Sliding Door	CU./FT.	Capacity 12oz.btls. / 12oz.cans	# of Dividers	HP	AMPS	Crated Weight (lbs.)	L x D* x H† (inches)
TBC-80SD	3	16.5	30.8 / 43.2 cases	6	1/2	9	378	80 1/2 x 26 1/2 x 33 1/4
TBC-80SB	3	16.5	30.8 / 43.2 cases	6	1/2	9	378	80 1/2 x 26 1/2 x 33 1/4

Ver.201301

* Depth does not include 2" for cap catcher or 2" for rear spacers. † Height does not include 5" for caster height.

Model : TBC-80SD/SB

ELECTRICAL DATA	
Voltage	115/60/1
Plug Type	NEMA-5-15P
Full Load Amperes	9
Compressor HP	1/2
Refrigerant	R-134A
Cord Length (ft.)	8.5
DIMENSIONAL DATA	
Capacity (12oz.btls./12oz.cans)	30.8 / 43.2 cases
Net Capacity cu. ft.	16.5
Ext. Length Overall in.	80 1/2 (2044mm)
Ext. Depth Overall in.*	26 1/2 (673mm)
Ext. Height Overall in.†	33 1/4 (845mm)
Gross Weight lbs.	378
Net Weight lbs.	345
# of Dividers	6

Design and specifications subject to change without notice.
Actual shipping weight may differ due to extra packing materials for product protection.
* Depth does not include 2" for cap catcher or 2" for rear spacers.
† Height does not include 5" for caster height.

- **WARRANTY : (SD Model)** 3 Year Parts and Labor Warranty
  Additional 2 Year Warranty on Compressor
- **WARRANTY : (SB Model)** 2 Year Parts and Labor Warranty
  Additional 3 Year Warranty on Compressor

- SELF-CONTAINED SYSTEM
- 4" SWIVEL CASTERS STANDARD

PLAN VIEW

(unit : inch)

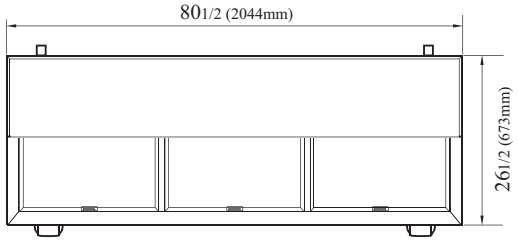

PLAN VIEW

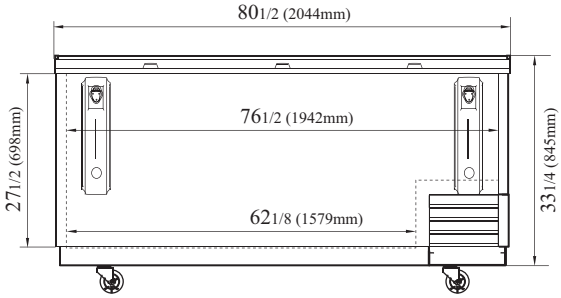

FRONT VIEW

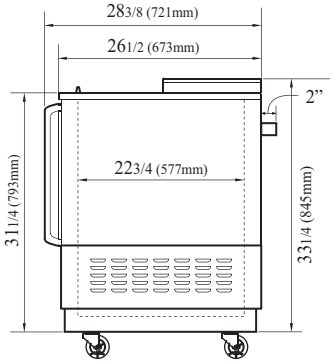

SIDE VIEW

Ver.201301

- Turbo Air : 800-627-0032
- GK : 800-500-3519
- Warranty : 800-381-7770
- AC : 888-900-1002