REFRIGERATOR MANUFACTURER
Turbo air
more durable,convenient,beautiful

1250 Victoria St
Carson, CA 90746
Tel. 310-900-1000
Fax. 310-900-1077
www.turboairinc.com

Project :	
Model # :	
Item # :	Qty :
Available W/H :	
Approval :	

Horizontal Open Display Cases Slim Line

Display Cases
Open Display Merchandisers

Model : TOM-75S(B)

TOM-75SB

TOM-75S

FEATURES / BENEFITS

- **Modern Design**
  By harmonizing curvature and rigidness, our modern style product designs are user-friendly while maintaining the highest product visibility and aesthetics.
- **Designed to Optimize Impulse Sales**
  Ideal for eye-catching displays and convenient access with fast service in high traffic area.
- **Environmentally Friendly, Efficient Refrigeration System**
  Turbo Air's refrigerators are designed with oversized and balanced environmentally friendly R-134A (CFC Free) refrigeration. Theses include large evaporators and condensers for faster cooling and balanced temperature throughout the cabinet.
- **Attractive Glass Sided Elegant Euro Design**
  Glass front shield and side walls optimize the merchandiser's display effects of fresh salads, sandwiches, desserts and beverages. Its elegant contemporary euro design will enhance any store application.
- **Non-Peel, Durable Anti-Rust Coating on the Exterior Reduces Fingerprints**
- **Top Display Dry Cases (TOMD-H) Available in All Sizes (optional)**
- **300 Series Stainless Steel Interior Standard Including Back Wall, Shelves and Deck Pans**
- **Perforated Interior Back Wall and Top for Improved Air Flow**
- **Standard Back-Guard Improves Airflow**
- **Foamed with Polyurethane, High-Density Cell Insulation (CFC Free)**
- **White and Black Color Come Standard**
- **Recommended Operating Conditions**
  TOM models are designed to operate in an environment where temperature & humidity do not exceed 75°F and 55% respectively. Units should not be installed near HVAC vents, fans or doorways that will disrupt the air curtain and compromise the function of the cabinet. Air curtain models will run most efficiently when completely loaded with product.

Intertek

Model	CU./FT.	# of Bottom Shelves	HP	AMPS	Crated Weight (lbs.)	L x D*x H (inches)
TOM-75S(B)	13.2	3	3/4	15.5	680	75 5/8 x 33 1/2 x 41 1/2

Ver.201301

* Depth does not include 1-1/8" for rear spacers.

Model : TOM-75S(B)

ELECTRICAL DATA	
Voltage	115/60/1
Plug Type	NEMA-5-20P
Full Load Amperes	15.5
Compressor HP	3/4
Refrigerant	R-134A
DIMENSIONAL DATA	
Net Capacity cu. ft.	13.2
Ext. Length Overall in.	75 5/8 (1920mm)
Ext. Depth Overall in.*	33 1/2 (850mm)
Ext. Height Overall in.	41 1/2 (1054mm)
Int. Length Overall in.	73 1/2 (1867mm)
Int. Depth Overall in.	24 (610mm)
Int. Height Overall in.	13 (330mm)
Gross Weight lbs.	680
Net Weight lbs.	498
# of Bottom Shelves	3
Self Size (Top)	73 1/8 x 7 x 2 1/2
Self Size (Middle)	73 1/8 x 14 1/8 x 3 1/4
Self Size (Low)	73 1/8 x 9 3/4 x 3/4

Design and specifications subject to change without notice.
Actual shipping weight may differ due to extra packing materials for product protection.
* Depth does not include 1-1/8" for rear spacers.

- **WARRANTY : 2 Year Parts and Labor Warranty**
  Additional 3 Year Warranty on Compressor
- **SIMPLE PLUG-IN INSTALLATION**
- **PATENTED SELF-CONTAINED SYSTEM, NO PLUMBING REQUIRED**

■ TOMD-75-H : 75" Non-Refrigerated top display case for slim line	
Ext. Dimension (L x D x H)	75 5/8 x 12 1/4 x 17 3/4
Int. Dimension (L x D x H)	73 1/4 x 9 1/8 x 15 7/8
Cu. ft	6.1
# of Shelves	2
Shelf size	36 1/2 x 7
Crated Weight lbs.	128

PLAN VIEW

(unit : inch)

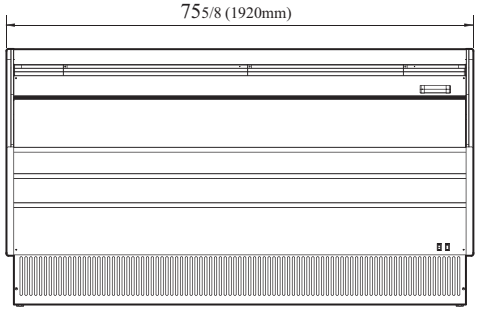

FRONT VIEW

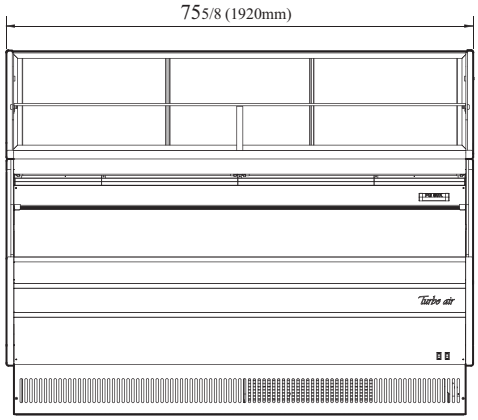

FRONT VIEW (W/ TOMD)

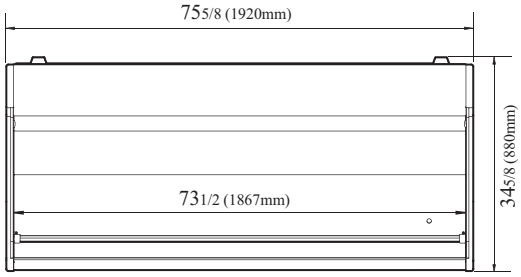

TOP VIEW

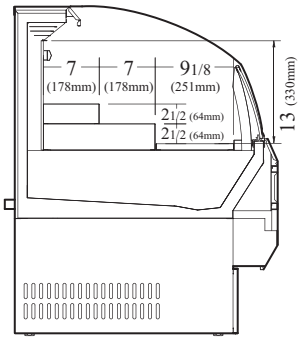

SIDE VIEW (INSIDE)

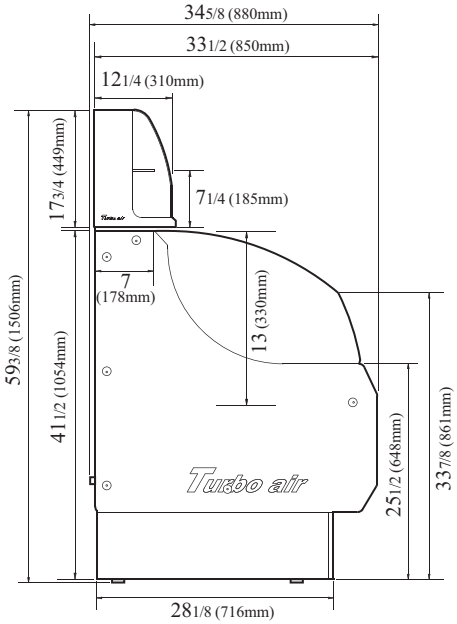

SIDE VIEW (W/ TOMD)

Ver.201301

- Turbo Air : 800-627-0032
- GK : 800-500-3519
- Warranty : 800-381-7770
- AC : 888-900-1002

Intertek
2 YEAR PARTS AND LABOR WARRANTY
Compressor 5 YEAR WARRANTY (U.S.A only)
Turbo air REFRIGERATOR MANUFACTURER
GERMAN KNIFE
RADIANCE
GREEN WORLD
Turbo air AIR CONDITIONER MANUFACTURER