TURBOCHEF

Project _____

Item No. _____

Quantity _____

HIGH h CONVEYOR 2020™

# HIGH h CONVEYOR 2020™

## PERFORMANCE

- The High h Conveyor 2020 offers high-heat transfer rates for accelerated cooking, a small enough footprint to fit virtually any application, and does not require the energy consumption and higher HVAC needs of larger ovens.

## VENTILATION

- UL 710B (KNLZ) listed for ventless operation.†
- EPA 202 test (8 hr):
  - Product: Pepperoni Pizza
    Results: 1.05 mg/m$^3$
  - Product: Sandwiches
    Results: 1.91 mg/m$^3$
    Ventless Requirement: <5.00 mg/m$^3$
- Internal catalytic filtration to limit smoke, grease, and odor emissions.

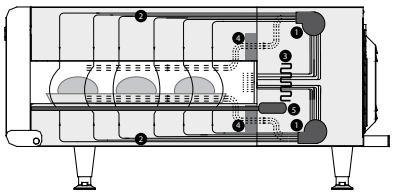

1. Blower Motor
2. Impinged Air
3. Impingement Heater
4. Catalytic Converters (optional)
5. Conveyor Motor

## EXTERIOR CONSTRUCTION

- 430 stainless steel front, top, sides and back
- Cool to touch covers and panels

## INTERIOR CONSTRUCTION

- Stainless steel interior
- 20-inch cook chamber

## STANDARD FEATURES

- Small footprint with throughput exceeding other 28-inch conveyors
- Independently-controlled top and bottom air impingement
- Variable-speed High h recirculating impingement airflow system
- Stackable design up to 3 high (requires stacking kits)
- Variable-speed blower motors
- Easy to clean mono-finger design
- Idle mode for energy conservation
- Built-in self diagnostics for monitoring oven components
- Left or right feed conveyor belt direction via software
- Includes plug and cord (6 ft.)
- Includes two 6" conveyor extensions
- Warranty – one year parts and labor
- Smart voltage sensor technology (U.S. only)

## OPTIONAL FEATURES

- Split belt with individually-adjustable speed settings (split 50/50, 70/30, 65/35)
- Dual catalytic converters for ventless operation.†

ANSI/NSF #4
81Y5

This product conforms to the ventilation recommendations set forth by NFPA96 using EPA202 test method.

† Ventless certification is for all food items except for foods classified as "fatty raw proteins." Such foods include bone-in, skin-on chicken, raw hamburger meat, raw bacon, raw sausage, steaks, etc. If cooking these types of foods, consult local HVAC codes and authorities to ensure compliance with ventilation requirements.

Ultimate ventless allowance is dependent upon AHJ approval, as some jurisdictions may not recognize the UL certification or application. If you have questions regarding ventless certifications or local codes please email ventless.help@turbochef.com

TurboChef reserves the right to make substitutions of components or change specifications without prior notice.

DOC-1078/Revision J/
May 2010

| DIMENSIONS | | |
|---|---|---|
| **SINGLE UNITS** | | |
| Height | 17.0″ | 432 mm |
| Width | 48.3″ | 1227 mm |
| Depth | 35.7″ | 907 mm |
| Weight | 195 lbs. | 88.5 kg |
| **Cook Chamber** | | |
| Baking Area | 2.8 $ft^2$ | 0.26 $m^2$ |
| Belt Length | 48.3″ | 1717 mm |
| Belt Width (Single) | 20″ | 508 mm |
| Belt Width (50/50 Split) | 9.5″ / 9.5″ | 241 mm / 241 mm |
| Belt Width (70/30 Split) | 15″ / 4″ | 381 mm / 102 mm |
| Belt Width (65/35 Split) | 13″ / 6.5″ | 330 mm / 165 mm |
| Max Operating Temp | 550°F | 288°C |
| Bake Time Range | 30 seconds to 15 minutes | |
| **Wall Clearance** | | |
| Top | 10″ | 254 mm |
| Sides | 0″ | 0 mm |
| Back | 0″ | 0 mm |

## SHIPPING INFORMATION

**U.S.:** All ovens shipped within the U.S. are packaged in a double-wall corrugated box banded to a wooden skid.
**International:** All International ovens shipped via Air or Less than Container Loads are packaged in wooden crates.

**Box size:** 55” (1,397 mm) x 43” (1,092 mm) x 27” (686 mm)
**Crate size:** 58” (1,473 mm) x 46” (1,168 mm) x 28” (711 mm)
**Item class:** 85 NMFC #26770 HS code 8419.81

**Approximate boxed weight:** 300 lb. (136 kg)
**Approximate crated weight:** 410 lb. (186 kg)

**Minimum entry clearance required for box:** 27.5” (699 mm)
**Minimum entry clearance required for crate:** 28.5 (724 mm)

**SEE OPPOSITE SIDE FOR ILLUSTRATIONS**


**TurboChef Global Operations**
4240 International Pkwy, Suite 105
Carrollton, Texas 75007 USA
US: 800.90TURBO (800.908.8726)
International: +1 214.379.6000
Fax: +1 214.379.6073
turbochef.com


| ELECTRICAL SPECIFICATIONS - USA | | |
|---|---|---|
| HCT-4215-1 (Single Belt)<br>HCT-4215-4 (50 / 50 Split Belt)<br>HCT-4215-7 (70 / 30 Split Belt)<br>HCT-4215-16 (65 / 35 Split Belt) | | 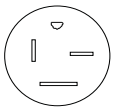 <br>NEMA 15-50P |
| Phase | 3 Phase | |
| Voltage | 208/240 VAC | |
| Frequency | 50/60 Hz | |
| Current Draw | 40 Amp | |
| Supply | 4 Wire | |
| Breakers | 50 Amp | |

| ELECTRICAL SPECIFICATIONS - CANADA | | |
|---|---|---|
| HCT-4215-10C (Single Belt)<br>HCT-4215-11C (50 / 50 Split Belt)<br>HCT-4215-12C (70 / 30 Split Belt) | | 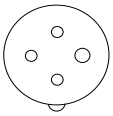 <br>UL 4 Pin, 60 Amp |
| Phase | 3 Phase | |
| Voltage | 208/240 VAC | |
| Frequency | 50/60 Hz | |
| Current Draw | 40/46 Amp | |
| Supply | 4 Wire | |
| Breakers | 50/60 Amp | |

| ELECTRICAL SPECIFICATIONS - EUROPE/ASIA (DELTA) | | |
|---|---|---|
| HCT-4215-2D (Single Belt)<br>HCT-4215-5D (50 / 50 Split Belt)<br>HCT-4215-8D (70 / 30 Split Belt)<br>HCT-4215-24D (65 / 35 Split Belt) | | 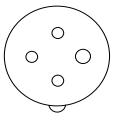 <br>IEC 4 Pin, 63 Amp |
| Phase | 3 Phase | |
| Voltage | 220 - 240 VAC | |
| Frequency | 50/60 Hz | |
| Current Draw | 40 Amp | |
| Supply | 4 Wire | |
| Breakers | 50 Amp | |

| ELECTRICAL SPECIFICATIONS - EUROPE/ASIA (WYE) | | |
|---|---|---|
| HCT-4215-3W (Single Belt)<br>HCT-4215-6W (50 / 50 Split Belt)<br>HCT-4215-9W (70 / 30 Split Belt)<br>HCT-4215-23W (65 / 35 Split Belt) | | 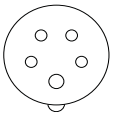 <br>IEC 5 Pin, 32 Amp |
| Phase | 3 Phase | |
| Voltage | 380 - 415 VAC | |
| Frequency | 50/60 Hz | |
| Current Draw | 20 Amp | |
| Supply | 5 Wire | |
| Breakers | 32 Amp | |

| ELECTRICAL SPECIFICATIONS - AUSTRALIA | | |
|---|---|---|
| HCT-4215-20W (Single Belt)<br>HCT-4215-21W (50 / 50 Split Belt)<br>HCT-4215-22W (70 / 30 Split Belt) | | 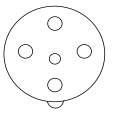 <br>IEC 5 Pin, 32 Amp |
| Phase | 3 Phase | |
| Voltage | 380 - 415 VAC | |
| Frequency | 50/60 Hz | |
| Current Draw | 20 Amp | |
| Supply | 5 Wire | |
| Breakers | 32 Amp | |

© 2009–2010 TurboChef Technologies, Inc.

HIGH h CONVEYOR 2020™

TURBOCHEF

## Front View

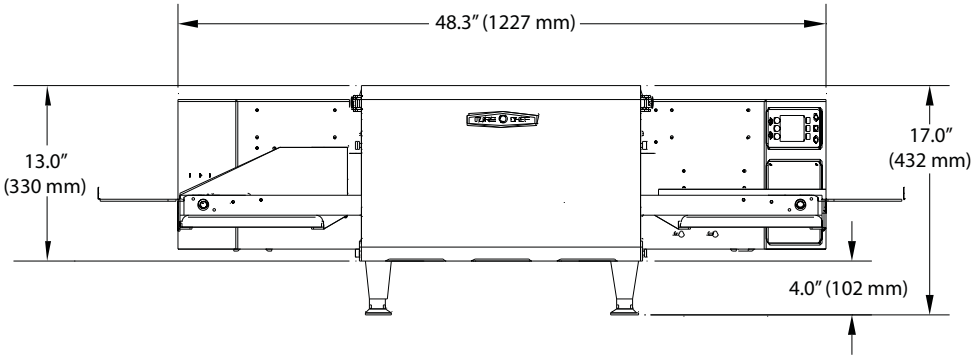


## Side View

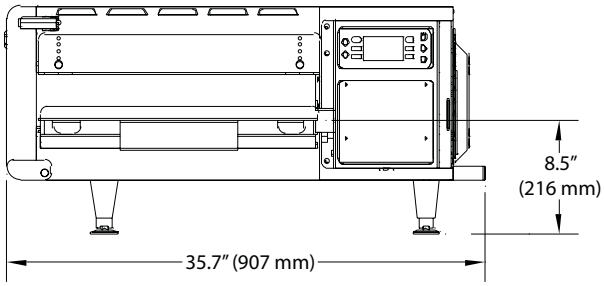


## Top View

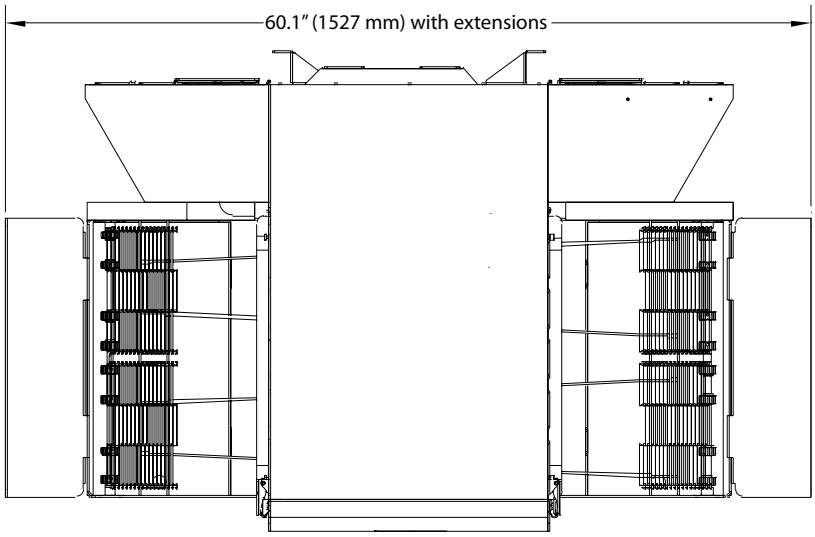
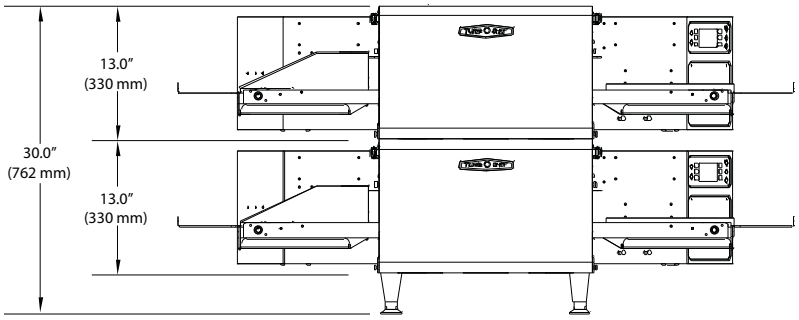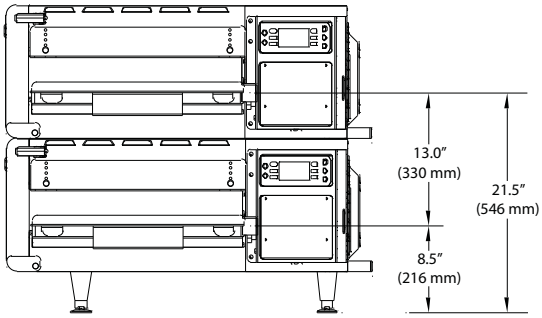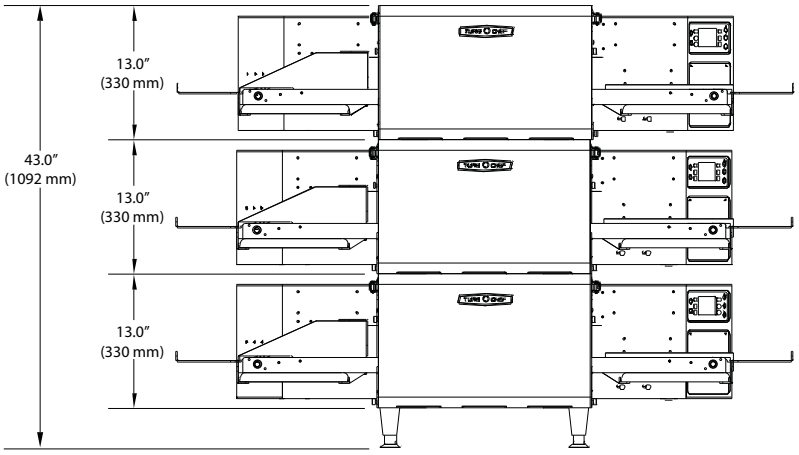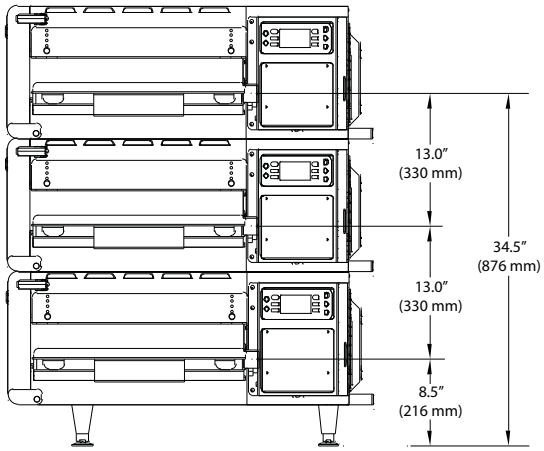
# Stacked Views