RADIANCE
4184 E. Conant st., Long Beach, CA 90808
Tel. 310-900-1000 Fax. 310-900-1077
www.turboairinc.com

Project :	
Model # :	
Item # :	Qty :
Available W/H :	
Approval :	

Manual Control Griddles

Model : TAMG-

TAMG-12

TAMG-24

TAMG-36

TAMG-48

FEATURES / BENEFITS

- Stainless steel front, side and 4" front top ledge.
- 4" backsplash with tapered side splashes.
- One thermostat control for each burner.
- One 22,000 BTU/hr U shaped aluminized burner for every 12" of griddle width.
- Ergonomically designed heat resistant PPS (Poly Phenylene Sulfide) On-Off knob.
- ¾" polished steel griddle plate.
- Adjustable stainless steel standing pilot for each burner.
- High efficiency griddle will provide faster cooking and recovery but less gas use.
- ¾" rear gas connection and gas pressure regulator.
- 2" stainless steel legs included.
- Available in 12", 24", 36" and 48" wide.
- A full one year limited parts and labor warranty.

SANITATION
NSF/ANSI 4

Model	Control	# of Burners	Total BTUs	Plate Depth	Crated Weight (lbs.)	L x D* x H† (inches)
TAMG-12	Manual	1	22,000	22	136	12 x 30 1/2 x 12 1/2
TAMG-24	Manual	2	44,000	22	220	24 x 30 1/2 x 12 1/2
TAMG-36	Manual	3	66,000	22	302	36 x 30 1/2 x 12 1/2
TAMG-48	Manual	4	88,000	22	286	48 x 30 1/2 x 12 1/2

Ver.201401

* Depth does not include 3/4" for rear gas connection. † Height does not include 2" for leg height.

Manual Control Griddles

Model : TAMG-

GAS DATA	TAMG-12	TAMG-24	TAMG-36	TAMG-48
Gas Type	NAT/LP Convertible	NAT/LP Convertible	NAT/LP Convertible	NAT/LP Convertible
Gas Connection	3/4”	3/4”	3/4”	3/4”
Regulator	3/4”	3/4”	3/4”	3/4”
Gas Pressure	NAT : 5W.C” / LP : 10W.C”	NAT : 5W.C” / LP : 10W.C”	NAT : 5W.C” / LP : 10W.C”	NAT : 5W.C” / LP : 10W.C”
SHIPPING DATA				
Class	85	85	85	85
Length (in.)	12 (305mm)	24 (610mm)	36 (914mm)	48 (1219mm)
Depth (in.)*	30 1/2 (775mm)	30 1/2 (775mm)	30 1/2 (775mm)	30 1/2 (775mm)
Height (in.) †	12 1/2 (317mm)	12 1/2 (317mm)	12 1/2 (317mm)	12 1/2 (317mm)
Shipping Weight (lbs.)	136	220	302	386

Design and specifications subject to change without notice.
Actual shipping weight may differ due to extra packing materials for product protection.
* Depth does not include 3/4” for rear gas connection.
† Height does not include 2” for leg height.

■ **WARRANTY : 1 Year Parts and Labor Warranty**

(unit : inch) **PLAN VIEW**

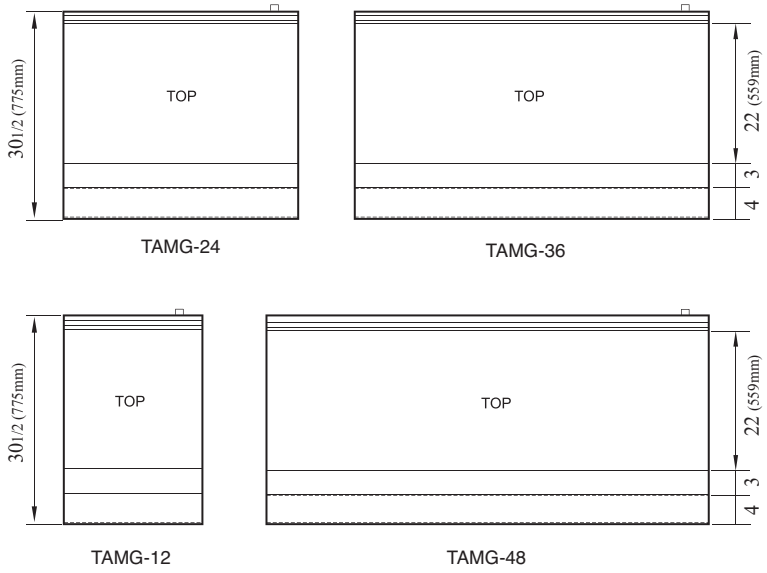

TOP VIEW

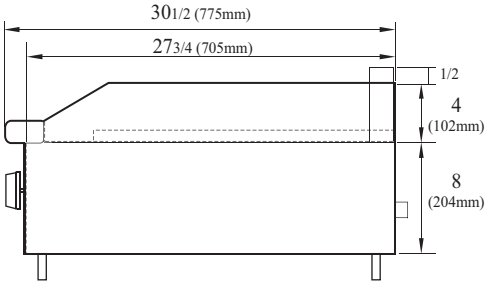

SIDE VIEW

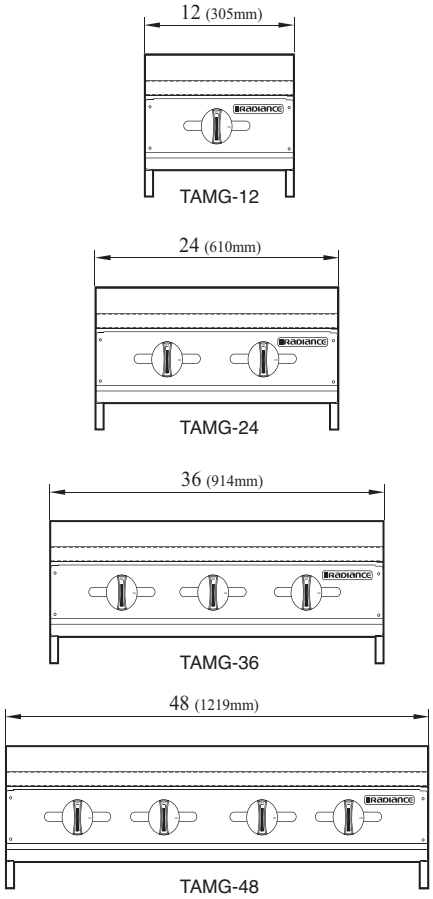

FRONT VIEW

Ver.201401

SANITATION NSF/ANSI 4

- **Turbo Air** : 800-627-0032
- **GK** : 800-500-3519
- **Warranty** : 800-381-7770
- **AC** : 888-900-1002