Project:

Item Number:

Quantity:

CAYENNE® CONVECTION OVENS

40703

40702

Cayenne® Convection Ovens

MODELS

40701	**COA7002**	**Half-Size Sheet Pans with Broil Function**
40702	**COA8004**	**Full Size Sheet Pans with Steam Injector**
40703	**COA8005**	**Half-Size Sheet Pans with Broil Function**

FEATURES

- ❑ Custom baffle fan and specially designed diffuser plate create consistent air flow and even, reliable baking
- ❑ 120 minute bake timer feature automatically switches oven off after set time
- ❑ Cool-touch door is easily removed for cleaning – features heavy-duty stainless steel construction and hinges for durability
- ❑ Removable shelf runners and rounded interior corners for easier cleaning
- ❑ Stainless steel interior and exterior finish
- ❑ Supplied with non-tip, chrome plated steel shelves
- ❑ Interior light makes monitoring cooking easier
- ❑ Temperature range: 150° - 570° F (66° - 299° C)
- ❑ Knob guards protect thermostat and timer against damage or accidental changes
- ❑ 40702 features a steam injection system for manual humidity control, which allows for browning and crisping of pastry and bread products. Also features advanced circulation with dual, self-reversing fans for more uniform cooking.
- ❑ Models 40701 and 40703 offer a broil function
- ❑ 40703 is the perfect size for portable catering applications
- ❑ 4 ft. (1.2 m) cord with plug

DESCRIPTION

Vollrath Cayenne® Convection Ovens offer the perfect opportunity for operations to break into the fresh-baked market or expand existing menus. Ideally suited for dough products, pastries, and cakes – use with pre-made frozen products to achieve fresh-baked sales with high speed and minimal fuss.

CLEARANCE AND POSITIONING

This appliance must be installed with a minimum clearance of 6" (15.2 cm) between the left, right and back sides, and any combustible surface. The supplied 4" (10.2 cm) legs must be installed and the unit placed on a non-combustible surface.

WARRANTY: All models shown come with Vollrath's standard warranty against defects in materials and workmanship. For full warranty details, please refer to the Vollrath Equipment and Smallwares Catalog.

Agency Listings

NSF

Intertek

Due to continued product improvement, please consult www.vollrathco.com for current product specifications.

Approvals	Date

Setting the Standard™

www.vollrathco.com

The Vollrath Company, L.L.C.
1236 North 18th Street
Sheboygan, WI 53081-3201 U.S.A.
Customer Service: 800.628.0830
Canada Customer Service: 800.695.8560
Main Fax: 800.752.5620 or 920.459.6573

Technical Services: 800.628.0832
Technical Services Fax: 920.459.5462

CAYENNE® CONVECTION OVENS

MODELS

40701	COA7002	Half-Size Sheet Pans with Broil Function
40702	COA8004	Full Size Sheet Pans with Steam Injector
40703	COA8005	Half-Size Sheet Pans with Broil Function

DIMENSIONS

Dimensions shown in inches (cm).

40701 and 40703

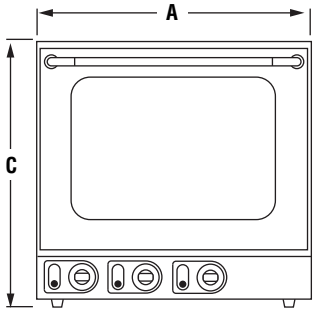

Front View

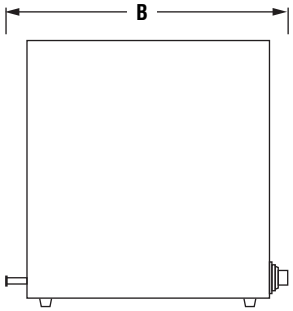

Side View

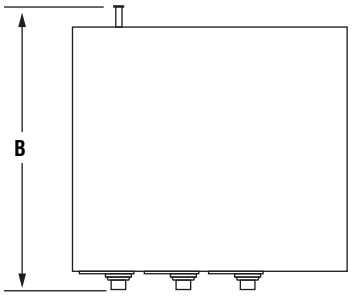

Top View

40702

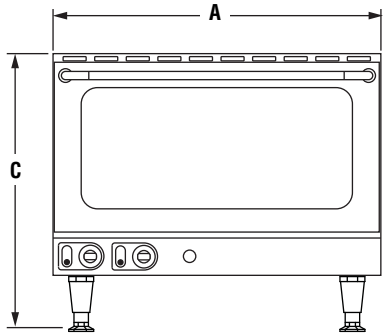

Front View

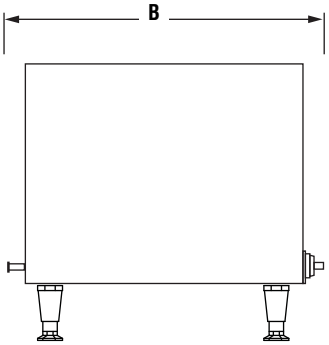

Side View

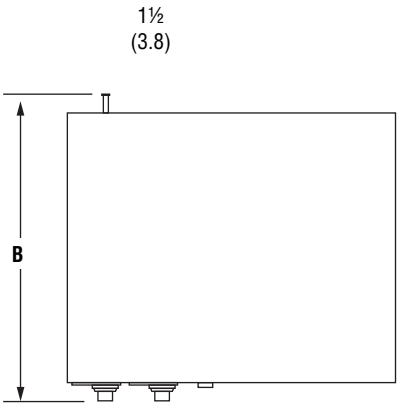

Top View

SPECIFICATIONS

Item	Number of Shelves (included)	Overall Dimensions (A) Width	Overall Dimensions (B) Depth	Overall Dimensions (C) Height	Cooking Chamber Size Width	Cooking Chamber Size Depth	Cooking Chamber Size Height	Watts	Volts	Amps	Ship Weight lb (kg)	Plug
40703	3	23 7/16 (59.5)	24½ (62.2)	18 1/16 (45.8)	18½ (47)	13 (33)	8 9/16 (21.8)	1400	120	11.6	70 (31.8)	5-15P
40701	4	23 7/16 (59.5)	24½ (62.2)	23¼ (59)	18½ (47)	13 (33)	13¾ (35)	2400	230	11	86 (39)	6-15P
40702	4	32 15/16 (83.7)	29¾ (75.5)	26 3/16 (66.5)	27 5/8 (70.2)	19 7/16 (49.4)	13¾ (35)	5600	230	25.5	166 (75.3)	6-50P

Receptacles

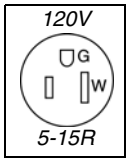

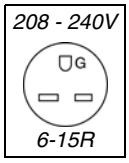

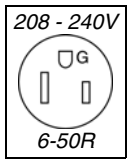

The Vollrath Company, L.L.C.
1236 North 18th Street
Sheboygan, WI 53081-3201 U.S.A.
Customer Service: 800.628.0830
Canada Customer Service: 800.695.8560
Main Fax: 800.752.5620 or 920.459.6573

Technical Services: 800.628.0832
Technical Services Fax: 920.459.5462

www.vollrathco.com

©2011 The Vollrath Company L.L.C.

Form Number L35750 4/11
Printed in USA