Project:

Item Number:

Quantity:

CAYENNE® GAS HOT PLATES

Cayenne® Gas Hot Plates

MODELS

40736	HPA1002	12" Gas Hot Plate
40737	HPA1004	24" Gas Hot Plate
40738	HPA1006	36" Gas Hot Plate

DESCRIPTION

Vollrath's Cayenne® Gas Hot Plates provide a simple and effective way to prepare food with high effeciency in an economical, safe and easy way. Ideal for use in steak houses, restaurants, coffee shops, clubs and pubs.

CLEARANCE AND POSITIONING

This appliance must be installed with a minimum clearance of 6" (15.2 cm) between the left, right and back sides, and any combustible surface. The supplied 4" (10.2 cm) legs must be installed and the unit placed on a non-combustible surface

FEATURES

- ❑ Shipped natural gas - includes kit with regulator for field conversion to propane
- ❑ Superior burners for fast heating and even heat distribution
- ❑ 26,000 BTU per burner
- ❑ Stainless and aluminized steel with fully-welded construction for durability and long life
- ❑ All metal knobs and knob guards protect gas valves from damage and won't break or crack and are **GUARANTEED FOR LIFE**
- ❑ Front access openings for lighting of pilot lights
- ❑ Each burner has a separate individual grate for easier handling and cleaning
- ❑ Front-back 12" model (40736) offers narrow footprint for tight counter spaces
- ❑ Full-width stainless steel drip pan
- ❑ Bull-nose design to protect from burns
- ❑ Heavy-duty legs with leveling adjustment
- ❑ ¾" NPT gas inlet

WARRANTY: All models shown come with Vollrath's standard warranty against defects in materials and workmanship. For full warranty details, please refer to the Vollrath Equipment and Smallwares Catalog.

Agency Listings

SANITATION

Due to continued product improvement, please consult www.vollrathco.com for current product specifications.

Approvals	Date

Setting the Standard™

www.vollrathco.com

The Vollrath Company, L.L.C.
1236 North 18th Street
Sheboygan, WI 53081-3201 U.S.A.
Customer Service: 800.628.0830
Canada Customer Service: 800.695.8560
Main Fax: 800.752.5620 or 920.459.6573

Technical Services: 800.628.0832
Technical Services Fax: 920.459.5462

CAYENNE® GAS HOT PLATES

MODELS

40736	HPA1002	12" Gas Hot Plate
40737	HPA1004	24" Gas Hot Plate
40738	HPA1006	36" Gas Hot Plate

DIMENSIONS

Dimensions shown in inches (cm).

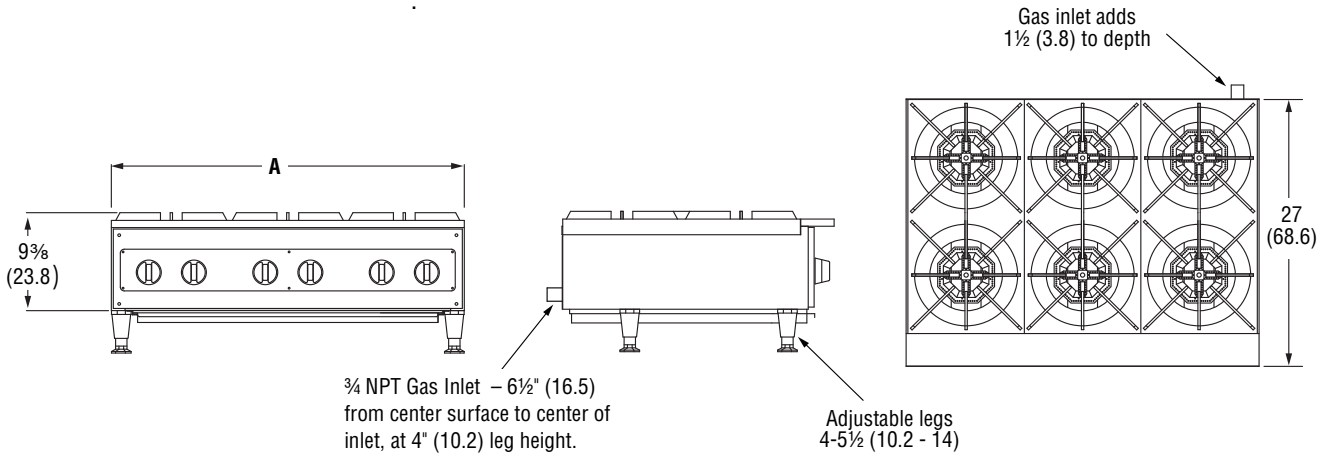

Front View *Side View* *Top/ View*

SPECIFICATIONS

Item	(A) Width	Output (BTU)	Number of Burners	Control Type	Pilot Type	Number of Drip Trays	Ship Weight Lb (Kg)
40736	12 (30.5)	52,000	2 (front and back)	Manual	Standing	1	96 (43.5)
40737	23⅝ (59.9)	104,000	4	Manual	Standing	1	169 (76.7)
40738	35½ (90.2)	156,000	6	Manual	Standing	1	228 (103.4)

The Vollrath Company, L.L.C.

VOLLRATH® Setting the Standard™

www.vollrathco.com

The Vollrath Company, L.L.C.
1236 North 18th Street
Sheboygan, WI 53081-3201 U.S.A.
Customer Service: 800.628.0830
Canada Customer Service: 800.695.8560
Main Fax: 800.752.5620 or 920.459.6573

Technical Services: 800.628.0832
Technical Services Fax: 920.459.5462

©2011 The Vollrath Company L.L.C.
Form Number L35741 3/11
Printed in USA