Project:

Item Number:

Quantity:

ELECTRIC MEAT GRINDERS

40743 Meat Grinder No. 12

MODELS

40743 MIN0012 Meat Grinder No. 12
40744 MIN0022 Meat Grinder No. 22

DESCRIPTION

Vollrath's meat grinders are noted for their exceptional reliability and attractive, compact design. The grinder body, head and tray are constructed of stainless steel.

FEATURES

- ❑ Energy efficient motor and precision gear drive
- ❑ Excellent fit and finish with no sharp corners or seams
- ❑ Forward and reverse switch
- ❑ Reliable under the most demanding conditions
- ❑ Attractive, compact design suitable for any open kitchen or supermarket
- ❑ Shipped with ⅛" (32 mm) and 5⁄16" (79 mm) grinder plates
- ❑ Perfect for butchers, supermarkets, Asian restaurants, delis, and pizza shops
- ❑ Sausage stuffer and feed stick accessories included
- ❑ Convenient top-mounted carrying handle
- ❑ Grinding head, pan and attachments are dishwasher safe
- ❑ No. 12 unit features 1 HP motor to grind 264 lb (120 kg) of meat per hour
- ❑ No. 22 unit features 1.5 HP motor to grind 528 lb (240 kg) of meat per hour
- ❑ 6 ft. (1.8 m) cord with plug

WARRANTY: All models shown come with Vollrath's standard warranty against defects in materials and workmanship. For full warranty details, please refer to the Vollrath Equipment and Smallwares Catalog.

Agency Listings

NSF
Intertek

Due to continued product improvement, please consult www.vollrathco.com for current product specifications.

Approvals	Date

Setting the Standard™
www.vollrathco.com

The Vollrath Company, L.L.C.
1236 North 18th Street
Sheboygan, WI 53081-3201 U.S.A.
Customer Service: 800.628.0830
Canada Customer Service: 800.695.8560
Main Fax: 800.752.5620 or 920.459.6573

Technical Services: 800.628.0832
Technical Services Fax: 920.459.5462

ELECTRIC MEAT GRINDERS

MODELS

40743	MIN0012	Meat Grinder No. 12
40744	MIN0022	Meat Grinder No. 22

DIMENSIONS

Dimensions shown in inches (cm).

40743

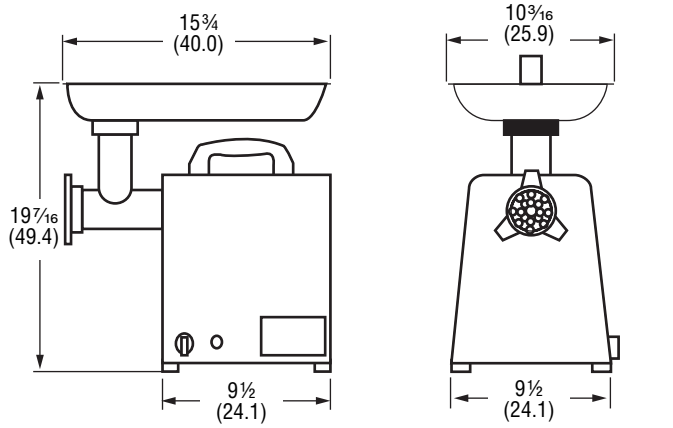

Side View *Front View*

40744

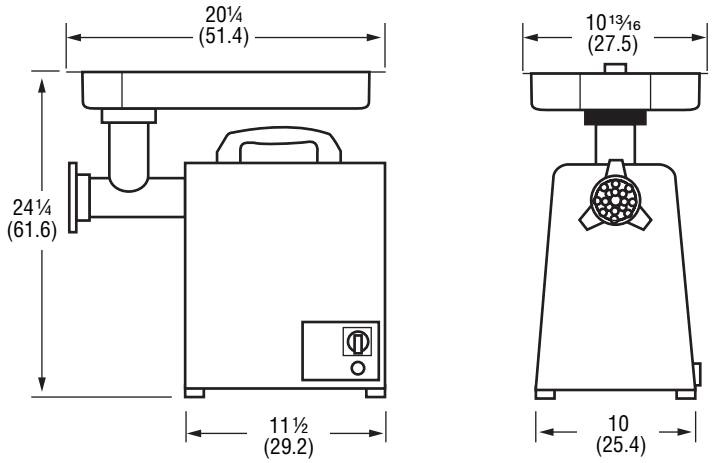

Side View *Front View*

SPECIFICATIONS

Item	Output	HP	Voltage	Amps	Plug
40743	264 (lbs/hr)	1	110	8	5-15P
40744	528 (lbs/hr)	1½	110	16	5-20P

Receptacles

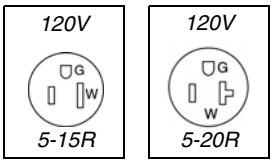

The Vollrath Company, L.L.C.
1236 North 18th Street
Sheboygan, WI 53081-3201 U.S.A.
Customer Service: 800.628.0830
Canada Customer Service: 800.695.8560
Main Fax: 800.752.5620 or 920.459.6573

Technical Services: 800.628.0832
Technical Services Fax: 920.459.5462

www.vollrathco.com

©2011 The Vollrath Company L.L.C.

Form Number L35739 3/11
Printed in USA