Item # _____ C.S.I. Section 11420

RESTAURANT RANGES

ENDURANCE GAS RESTAURANT RANGE
10 OPEN BURNERS
60" WIDE GAS RANGE

Model 60SS-10BN
(shown with optional casters)

- ☐ **60SS-10BN** 2 Standard Ovens / Natural Gas
- ☐ **60SS-10BP** 2 Standard Ovens / Propane
- ☐ **60SC-10BN** 1 Standard Oven / 1 Convection Oven Natural Gas
- ☐ **60SC-10BP** 1 Standard Oven / 1 Convection Oven Propane

STANDARD FEATURES

- Fully MIG welded frame
- Stainless steel front, sides, backriser, lift-off high shelf
- 6" stainless steel adjustable legs
- Ten open top burners, each burner is 30,000 BTU/hr. with lift-off burner heads
- Shrouded flash tube pilot system (one pilot per two burners)
- Heavy duty cast grates, easy lift-off 12" x 12½" in front and 12" x 14½" in the rear
- Extra deep pull out crumb tray with welded corners
- Left oven: 23,000 BTU/hr. baker's depth oven cavity, full size sheet pans (18" x 26") fit front to back only
- Right oven: 35,000 BTU/hr. baker's depth oven cavity, full size sheet pans (18" x 26") fit front to back and side to side
- Oven thermostats adjusts from 250°F to 500°F
- Two oven racks and four rack positions for each oven
- Right oven: 35,000 BTU/hr. convection oven in place of standard oven 24"d x 26⅜"w x 13⅞"h (115v - 1 phase blower motor, 4 amp, 6' cord and plug, includes three oven racks. Full size sheet pans only fit side-to-side in convection oven. Convection oven motor requires field attachment.
- 1" rear gas connection and pressure regulator
- One year limited parts and labor warranty

SPECIFICATIONS

60" wide gas restaurant range, Vulcan Model No. 60SS-10BN. Fully MIG welded aluminized steel frame for added durability. Stainless steel front, sides, backriser, highshelf and 6" adjustable legs. Extra deep crumb tray with welded corners. Ten 30,000 BTU/hr. open top burners with lift-off burner heads. Energy saving flashtube open burner ignition system (one pilot for every two burners) shrouded for reliability. Heavy duty cast grates, easy lift-off 12" x 12½" in the front and 12" x 14½" in the back to better accommodate stock pots or large pans. Grates have a built in aeration bowl for greater efficiency. Burner knobs are cool to the touch, high temperature material. Two ovens: left oven is 23,000 BTU/hr. bakers depth oven, measures 26¼"d x 20¼"w x 14"h. Right oven is 35,000 BTU/hr. bakers depth oven, measures 27"d x 26⅜"w x 14"h. Both ovens have porcelain bottoms and door panels. Oven thermostats adjusts from 250°F to 500°F with a low setting. Each oven is supplied with two racks, two rack guide sets, and four rack positions. Oven doors are heavy duty with an integrated door hingespring mechanism requiring no adjustment. 1" rear gas connections with rear manifold and pressure regulator. Total input 358,000 BTU/hr.

Exterior Dimensions:
34"d x 60"w x 58"h on 6" adjustable legs

ACCESSORIES (Packaged & Sold Separately)

- ☐ Extra oven rack with rack guides
- ☐ Casters (set of eight)
- ☐ Leveling casters (set of eight)
- ☐ Flanged feet (set of eight)
- ☐ 10" stainless steel stub back
- ☐ Reinforced high shelf for mounting salamander broiler

VULCAN
a division of ITW Food Equipment Group LLC
P.O. Box 696 ▪ Louisville, KY 40201 ▪ Toll-free: 1-800-814-2028 ▪ Local: 502-778-2791 ▪ Quote & Order Fax: 1-800-444-0602

Mission Restaurant Suppy - Webstore

ENDURANCE GAS RESTAURANT RANGE
10 OPEN BURNERS
60" WIDE GAS RANGE

INSTALLATION INSTRUCTIONS

1. A pressure regulator sized for this unit is included. Natural gas 5.0" W.C., propane gas 10.0" W.C.
2. Gas line connecting to range must be 1" or larger. If flexible connectors are used, the inside diameter must be 1" or larger.
3. An adequate ventilation system is required for commercial cooking equipment. Information may be obtained by writing to the National Fire Protection Association, 1 Batterymarch Park, Quincy, MA 02269, www.NFPA.org. When writing, refer to NFPA No. 96.
4. These units are manufactured for installation in accordance with ANSZ223.1A (latest edition), National Fuel Gas Code. Copies may be obtained from The American Gas Association, 400 N Capitol St. NW, Washington, DC 20001, www.AGA.org.
5. **Clearances**

	Rear	Sides
Combustible	6"	10"
Standard Oven Non-combustible	0"	0"
Convection Oven Non-combustible	Min. 4"	0"

6. For proper combustion, install equipment on adjustable legs or casters provided with unit.

NOTE: In line with its policy to continually improve its product, Vulcan reserves the right to change materials and specifications without notice.

Specify type of gas when ordering.
Specify altitude when above 2,000 feet.

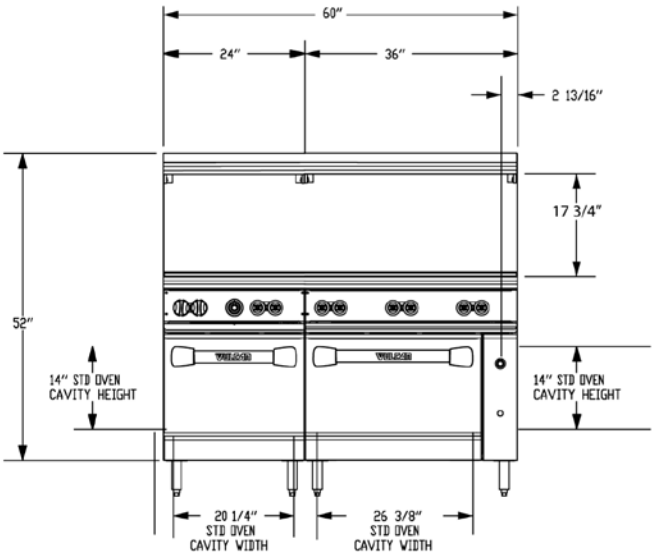

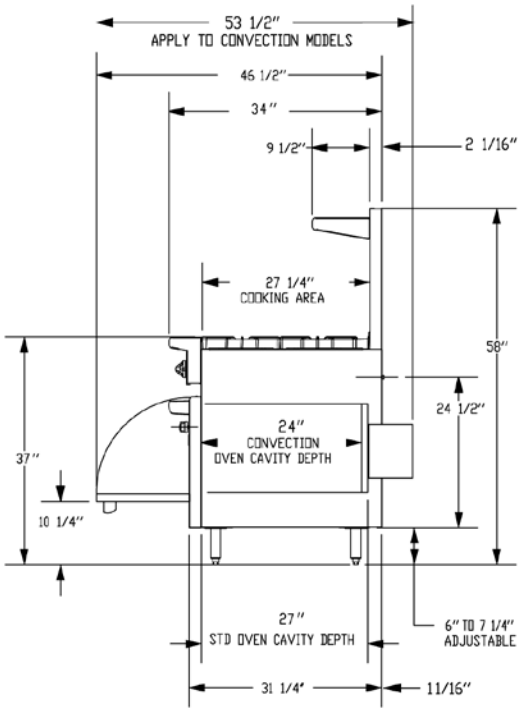

TOP CONFIGURATION	MODEL NUMBER	DESCRIPTION	TOTAL INPUT BTU / HR	SHIPPING WEIGHT LBS / KG
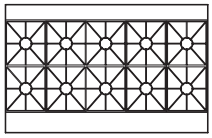	**60SS-10BN**	2 Standard Ovens / 10 Burners / Natural Gas	358,000	890 / 404
	60SS-10BP	2 Standard Ovens / 10 Burners / Propane	358,000	890 / 404
	60SC-10BP	1 Standard Oven / 1 Convection Oven / 10 Burners / Natural Gas	358,000	950 / 431
	60SC-10BP	1 Standard Oven / 1 Convection Oven / 10 Burners / Propane	358,000	950 / 431

This appliance is manufactured for commercial use only and is not intended for home use.

a division of ITW Food Equipment Group LLC

P.O. Box 696 ▪ Louisville, KY 40201 ▪ Toll-free: 1-800-814-2028 ▪ Local: 502-778-2791 ▪ Quote & Order Fax: 1-800-444-0602

NOTE: In line with its policy to continually improve its products, Vulcan reserves the right to change materials and specifications without notice.

Mission Restaurant Suppy - Webstore

Printed On Recycled Paper