WARING COMMERCIAL®

Heavy-Duty Commercial, Combination & Bagel Toasters

Features

- Uniformly toasts regular bread, Texas toast, frozen waffles, and many other foods
- Easily replaceable industrial heating plates
- Standard 4-slice, combination bread and bagel and dedicated bagel toasters available
- WCT850 (not pictured) Standard/Bagel Switchable Toaster
- Bagel slots toast on cut side only
- Electronic browning controls and carriage control levers
- Dishwasher-safe crumb tray
- Limited One Year Warranty

WCT810/WCT815/WCT815B
Combination Toasters

WCT820/WCT825/WCT825B
Bagel Toasters

WCT800RC/WCT800
WCT805/WCT805B
Standard 4-Slice Toasters

Mission Restaurant Suppy - Webstore

WARING COMMERCIAL

Heavy-Duty Commercial, Combination & Bagel Toasters

Specifications

Item	Electrical	Listings	Watts	Amps	Plug	Output (Slices/Hour)	Slot Width
WCT800RC	120 VAC, 50/60 Hz	UL, CUL, NSF	1800	15	NEMA 5-15P	240	(4) 1⅛"
WCT800	120 VAC, 50/60 Hz	ETL, NSF	2200	19	NEMA 5-20P	300	(4) 1⅛"
WCT805B	208 VAC, 50/60 Hz	UL, CUL, NSF	2700	13	NEMA 6-20P	380	(4) 1⅛"
WCT805	240 VAC, 50/60 Hz	UL, CUL, NSF	2700	12	NEMA 6-15P	380	(4) 1⅛"
WCT810	120 VAC, 50/60 Hz	ETL, NSF	2025	17	NEMA 5-20P	380	(2) 1⅛", (2) 1½"
WCT815B	208 VAC, 50/60 Hz	UL, CUL, NSF	2025	10	NEMA 6-15P	380	(2) 1⅛", (2) 1½"
WCT815	240 VAC, 50/60 Hz	UL, CUL, NSF	2025	9	NEMA 6-15P	380	(2) 1⅛", (2) 1½"
WCT820	120 VAC, 50/60 Hz	ETL, NSF	1500	12.5	NEMA 5-15P	380	(4) 1½"
WCT825	240 VAC, 50/60 Hz	ETL, NSF	1500	6.25	NEMA 6-15P	380	(4) 1½"
WCT825B	208 VAC, 50/60 Hz	ETL, NSF	1500	7.25	NEMA 6-15P	380	(4) 1½"
WCT850	208 VAC, 50/60 Hz	ETL, NSF	2800+	13.8+	NEMA 6-20P	360+	(4) 1½"

Ordering Information

All models listed have a Limited 1 Year Warranty.
+ Maximum when both sides switched to TOAST

Description	Catalog #	Std Pkg.	Ship Wt. (lbs.)	Cubic Feet	UPC Code
Heavy-Duty 120V **Standard** Toaster	WCT800RC	1	22	1.6	040072002915
Heavy-Duty 120V **Standard** Toaster	WCT800	1	22	1.6	040072001451
Heavy-Duty 208V **Standard** Toaster	WCT805B	1	22	1.6	040072003196
Heavy-Duty 240V **Standard** Toaster	WCT805	1	22	1.6	040072001468
Heavy-Duty 120V **Combination** Toaster	WCT810	1	22	1.6	040072001475
Heavy-Duty 208V **Combination** Toaster	WCT815B	1	22	1.6	040072003219
Heavy-Duty 240V **Combination** Toaster	WCT815	1	22	1.6	040072001482
Heavy-Duty 120V **Bagel** Toaster	WCT820	1	22	1.6	040072010019
Heavy-Duty 240V **Bagel** Toaster	WCT825	1	22	1.6	040072010972
Heavy-Duty 208V **Bagel** Toaster	WCT825B	1	22	1.6	040072010989
Heavy-Duty 208V **Switchable** Toaster	WCT850	1	22	1.6	040072014314

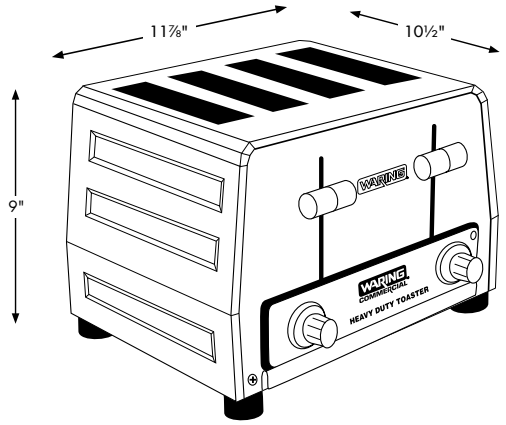

Dimensions are the same for all models.
(9" H x 11⅞" W x 10½" D)

Waring Commercial • 314 Ella T. Grasso Ave. • Torrington, Connecticut 06790
Tel. (800) 492-7464 • Fax (860) 496-9008 • www.waringproducts.com
©2010 Conair Corporation

11WC118440
PG-21496A

Mission Restaurant Suppy - Webstore