Item # _____

Model X13AE

Automatic Gravity Feed Slicer

❑ X13AE Automatic Gravity Feed Slicer

Model X13AE

Features

Berkel model X13AE automatic gravity feed slicer offers a number of special features. A sanitary one piece engineered polymer base and product table reduces seams and joints while providing an NSF approved surface for easy, effective cleaning. A removable and submersible table mounted sharpener with borazon stones for accurate sharpening. Precise thickness control is achieved using a variable pitch barrel cam for fine adjustment and wafer thin slices. The index knob and operating controls are mounted outside of the drip zone for quick and easy access. The slicer can be automatically operated in three speeds, and with three different stroke lengths. A permanent ring guard protects the entire non-slicing portion of the knife during slicing and cleaning. A fence is included with the product table. An easy to use kick stand supports the slicer for easy access to clean under the slicer.

Approved By: _____

Date _____

Standard Features

- 1-speed, 1/2 HP, permanently lubricated ball bearing knife motor with thermal protection
- Automatic operation in three speeds: 20, 40 or 60 slices/minute
- Three stroke lengths: 1/3, 2/3 and full stroke
- Furnished in 120/60/1, 8 amps, AC, with 3 wire cord and plug (see below for optional voltages)
- One-piece NSF approved polymer base and product table for reduced seams, accessibility and easy cleaning
- Index knob conveniently located outside the drip zone in the upper left to provide quick and easy access
- Variable pitch barrel cam for ultra fine, precise slice adjustment to a thickness of 1 5/16" (34 mm)
- 13" (330 mm) diameter, hollow ground, hardened and polished forged stainless steel knife
- Large product table with extra capacity:
  - Rectangles up to 10½" x 6¾" (265 mm x 170 mm)
  - Squares up to 7½" (190 mm)
  - Rounds up to 8½" (220 mm) diameter
- Articulating and full length rear mounted meat pusher to secure and advance products evenly, fence to hold product during automatic operation
- Ergonomic, multi-grip handle to advance product table
- Submersible, removable product table mounted sharpener for consistent sharpening and easy cleaning
- Borazon sharpening stones for fast, accurate sharpening and extended life
- No-volt release requires restarting the slicer after a power interruption
- Permanent ring guard protects entire non-slicing portion of the knife
- LED indicates power to the slicer
- Sealed start/stop switches conveniently located on the index knob housing out of the food zone
- An easy to use kick stand for easy cleaning under the slicer

Power Options

❑ 1/2 HP, 220/50/1, 3.5 amps, AC, not submitted for ETL Listing

❑ 1/2 HP, 220/60/1, 3.5 amps, AC, not submitted for ETL Listing

Accessories

❑ Vegetable Chute with Pusher

❑ Skewers with Coring Tool

❑ Slaw Tray

Berkel Company • 2006 Northwestern Parkway • PO Box 696 • Louisville, KY 40201
800-348-0251 • FAX 888-888-2838 • www.berkel.com

Form BK45709 (03-09)

Model X13AE

Automatic Gravity Feed Slicer

Model No.	Cutting Capacity	Slice Thickness	Knife Diameter	Product Dimensions		
				Width A	Depth B	Height C
X13AE	Rect. 10½" x 6¾" (265 x 170 mm) Square 7½" (190 mm) Round 8½" (220 mm)	1 5/16" (34 mm)	13" (330 mm)	28" (710 mm)	29" (735 mm)	25" (635 mm)

Motor	Electrical	Weight	Box Dimensions		
			Width	Depth	Height
1-speed 1/2 HP	120/60/1 8 amps	Net 96 lb. (43 kg) Ship 126 lb. (57 kg)	31" (787 mm)	31" (787 mm)	31" (787 mm)

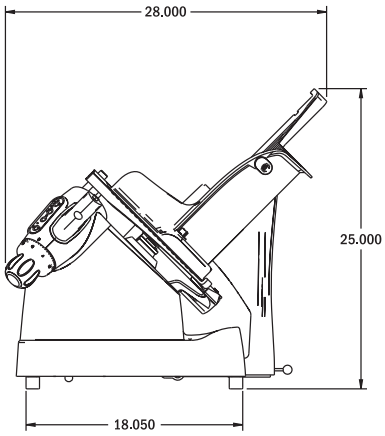

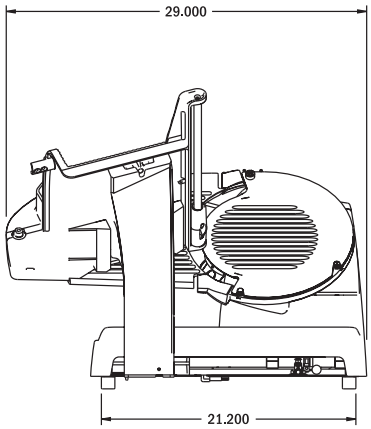

Specifications

Motor: Knife motor is 1-speed, 1/2 HP totally enclosed and permanently lubricated ball bearings, thermally protected. Table motor is brushless DC providing three fixed speeds, 20, 40 or 60 slices per minute. Three stroke lengths in the automatic mode, provide more slices/minute at the same speed.

Electrical: Furnished in 120/60/1, 8 amps, AC, ETL Listed, with 3-wire cord and plug. Power options noted on page 1.

Finish/Construction: Base, product table, pusher, support arm and upper housing are constructed of NSF approved, engineered polymers reducing the number of seams. Gauge plate and center plate are anodized aluminum. All controls are sealed and located out of the drip zone.

Knife: 13" (330 mm) diameter, hollow ground, hardened and polished stainless steel.

Knife Sharpener: Removable and submersible table mounted, two stone, dual action design to ensure correct pressure and contact angle are always applied, thus reducing knife wear and delivering a perfect edge. Borazon stones last longer, sharpen faster and clean easier.

Thickness Control: Index knob controls a precision, variable pitch barrel cam with ultra-fine adjustment in the first revolution and opens to a thickness of 1 5/16" (34 mm) for accurate and consistent slicing. This control is located out of the drip zone on the upper left to provide quick and easy access for operation and cleaning.

Cutting Capacity: Shown in chart above.

Product Table: Full gravity feed 45° angle with articulating rear mounted pusher that runs the entire length of the table to secure product for increased yield and consistency in every slice. A fence provides stability for the product in automatic mode.

Kick Stand: An easy to use kick stand supports the slicer for easy access to clean under the slicer.

No-volt Release: Requires restarting the slicer in the event of a power interruption.

Knife Ring Guard: Permanent tapered guard covers the non-slicing portion of the knife edge.

Controls: Sealed push-button switches located on the index knob housing out of the drip zone.

Warranty: Parts, labor and travel coverage for one year, exclusive of wear items.

As we continually strive to improve our products, specifications are necessarily subject to change without notice.

Berkel Company • 2006 Northwestern Parkway • PO Box 696 • Louisville, KY 40201
800-348-0251 • FAX 888-888-2838 • www.berkel.com

Form BK45709 (03-09)

Automatic Gravity Feed Slicer **Model X13AE**