REFRIGERATOR MANUFACTURER
Turbo air
more durable, efficient, beautiful

4184 E. Conant St.
Long Beach, CA 90808
Tel. 310-900-1000
Fax. 310-900-1077
www.turboairinc.com

Project :	
Model # :	
Item # :	Qty :
Available W/H :	
Approval :	

Soild Door Refrigerator

Reach-In Top Mounts
M3 Series

FEATURES / BENEFITS

Model : M3R72-3

- **Digital Temperature Control System**
  Provides precise and constant temperature. This level of precision allows food products to remain fresh over an extended period of time.
- **High-Tech Monitor**
  The monitor digitally displays the present temperature. You can easily change the temperature by adjusting the thermostat.
- **Hot Gas Condensate System**
  Through Turbo Air's creative innovation, the condensate system surfaces have been specially treated to resist corrosion. This not only increases efficiency without the risk of refrigerant leakage from corrosion, but also prevents the overflow of condensate water.
- **Efficient Refrigeration System**
  M3's solid door refrigerators are designed with oversized and balanced (CFC Free R-134A) refrigeration systems. These include efficient evaporators and condensers for faster cooling and greater efficiency.
- **Automatic Evaporator Fan Motor Delays**
  Through stopping the evaporator fan when the refrigerator door opens, the circulation of hot, moist air into the refrigerator is prevented. This increases energy efficiency and lengthens the life of the compressor.
- **Adjustable, Heavy Duty, PE(polyethylene) Coated Wire Shelves**
- **Stainless Steel Cabinet Construction**
  The Turbo Air M3 refrigerator model boasts a stainless steel exterior (galvanized steel top, bottom and back) and stainless steel interior with AL inside walls and door liners. It guarantees the utmost in cleanliness and long product life. Unlike other companies' products, the sharp corners and edges have been rounded to reduce the risk of injury. The M3 can add a touch of style to the most refined setting.
- **High-Density Polyurethane Insulation**
  The entire cabinet structure and solid doors are foamed-in-place using high density, CFC free polyurethane insulation.
- **Ergonomically Designed Doors**
  Customers' fatigue fades away with easy grip handles and doors that open effortlessly. These features along with self-closing doors make this the ultimate choice in customer convenience.
- **Magnetic Door Gaskets**
  Magnetic door gaskets are of one piece construction, removable without tools for ease of cleaning and replacement.
- **Top Mount Compressor Units**
  The refrigeration systems are designed to ensure that each part is properly sized and balanced to achieve the highest efficiency and performance.

Refrigerator Holds 33°F ~ 38°F for the Best in Food Preservation

Intertek ISO9001 2 YEAR WARRANTY 5 YEAR WARRANTY (U.S.A only) ENERGY STAR® Qualified

Model	Swing Door	CU./FT.	#of Shelves	HP	AMPS	Crated Weight (lbs.)	L x D* x H † (inches)
M3R72-3	3	72	9	1/2	11.3	559	77 3/4 x 30 3/4 x 78

Ver.201401

*Depth does not include 1-3/8" for rear condensate enclosure. † Height does not include 5" for caster height.

Soild Door Refrigerator

Reach-In Top Mounts
M3 Series

Model : M3R72-3

ELECTRICAL DATA	
Voltage	115/60/1
Plug Type	NEMA-5-15P
Full Load Amperes	11.3
Compressor HP	1/2
Feed Wires with Ground	3
Cord Length ft.	9
Refrigerant	R-134A
DIMENSIONAL DATA	
# of Doors	3
# of Racks Accepted	3
Net Capacity cu. ft.	72
Ext. Length Overall in.	77 3/4 (1975mm)
Ext. Depth Overall in.*	30 3/4 (780mm)
Ext. Height Overall in.†	78 (1981mm)
Int. Length Overall in.	73 7/8 (1877mm)
Int. Depth Overall in.	26 1/2 (675mm)
Int. Height Overall in.	54 1/4 (1379mm)
Gross Weight lbs.	559
# of Shelves	9
Shelf Size (LxD) in.	23 1/2x25 1/4 23 1/2x23 1/8 23 1/2x25 1/4

Design and specifications subject to change without notice.
Actual shipping weight may differ due to extra packing materials for product protection.
* Depth does not include 2" for rear condensate enclosure.
† Height does not include 5" for caster height.

- **WARRANTY : 2 Year Parts and Labor Warranty**
  Additional 3 Year Warranty on Compressor
- Incandescent Interior Lighting
- Self-Contained System
- Standard 4" Swivel Casters with Locks on the Front Set
- Door Locks Standard
- Solid and Sturdy Grille Design
- Low Profile Casters Available (Optional)
- Legs Available for All Models (Optional)
- Full and Half Pan Racks Available (Optional)

- **OPTIONAL ACCESSORIES :**
  - ❑ 5" Diameter swivel casters
  - ❑ 6" Standard legs
  - ❑ Additional PE coated wire shelves
  - ❑ Half door bun tray racks. Each holds up to seven 18"Lx26"D sheet pans (sold separately)
  - ❑ Full door bun tray racks. Each holds up to fifteen 18"Lx26"D sheet pans (sold separately)

Ver.201401

PLAN VIEW

(unit : inch)

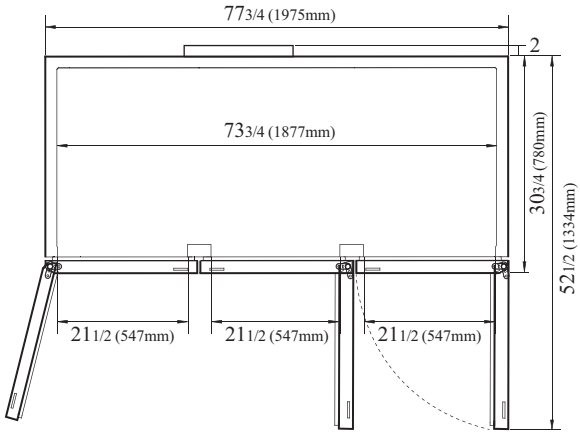

PLAN VIEW

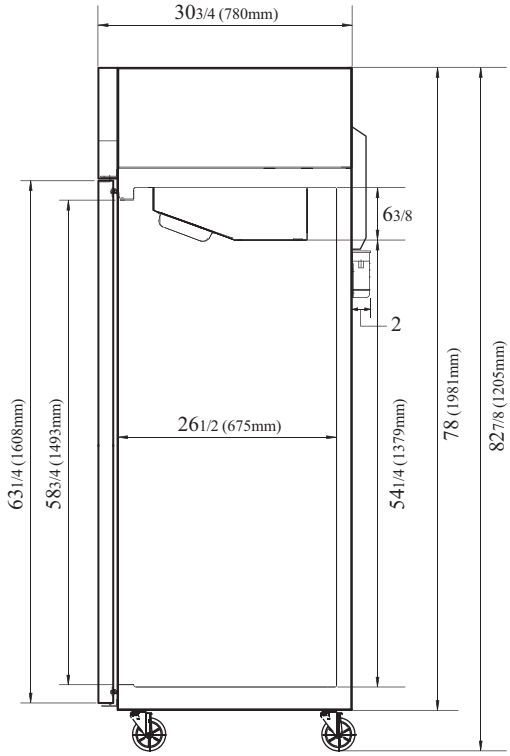

SIDE VIEW

Intertek ISO9001 2 YEAR WARRANTY Compressor 5 YEAR WARRANTY (U.S.A. only) ENERGY STAR® Qualified

- **Turbo Air** : 800-627-0032
- **GK** : 800-500-3519
- **Warranty** : 800-381-7770
- **AC** : 888-900-1002

Turbo air REFRIGERATOR MANUFACTURER GERMAN KNIFE RADIANCE GREEN WORLD Turbo air AIR CONDITIONER MANUFACTURER