**Project:**

**Item Number:**

**Quantity:**

# CAYENNE® MEDIUM-DUTY FLAT TOP GAS GRIDDLES

*Cayenne® Gas Griddle - Model 40720*

## DESCRIPTION

Vollrath's Cayenne® Gas Griddles provide a simple and effective way to prepare food in an economical, safe and hassle-free way. These griddles are ideally suited for use in steak houses, restaurants, coffee shops, clubs and pubs.

## CLEARANCE AND POSITIONING

This appliance must be installed with a minimum clearance of 6" (15.2 cm) between the left, right and back sides, and any combustible surface. The supplied 4" (10.2 cm) legs must be installed and the unit placed on a non-combustible surface.

### Agency Listings

*Due to continued product improvement, please consult www.vollrathco.com for current product specifications.*

## MODELS

| | | |
|---|---|---|
| **Manually Controlled Griddles** | | |
| 40718 | FTG9012 | 12" Gas Griddle, 28,000 BTU |
| 40719 | FTG9016 | 18" Gas Griddle, 28,000 BTU |
| 40720 | FTG9024 | 24" Gas Griddle, 56,000 BTU |
| 40721 | FTG9036 | 36" Gas Griddle, 84,000 BTU |
| 40839 | FTG9048 | 48" Gas Griddle, 112,000 BTU |
| 40840 | FTG9060 | 60" Gas Griddle, 140,000 BTU |
| **Thermostatically Controlled Griddles** | | |
| 40722 | FTA1024 | 24" Gas Griddle, 56,000 BTU |
| 40723 | FTA1036 | 36" Gas Griddle, 84,000 BTU |

## FEATURES

- ❑ Shipped set up for natural gas, includes kit for conversion to propane
- ❑ Includes regulator and gas valve
- ❑ 28,000 BTU custom stainless steel U-shaped burners for superior versatility, even heat distribution and efficient operation
- ❑ 12" (30.5 cm) wide heating zone per control (18" griddle has one burner)
- ❑ Stainless aluminized steel with fully-welded construction for durability and long life
- ❑ Polished ¾" (1.09 cm) thick steel griddle plate for even heat distribution and retention
- ❑ Welded griddle plate seams eliminate grease and dirt traps
- ❑ All metal knobs and knob guards protect gas valves from damage and won't break or crack and are **GUARANTEED FOR LIFE**
- ❑ 3/4" NPT gas inlet
- ❑ Heavy-duty adjustable legs
- ❑ Thermostatically controlled griddles maintain user settings to ensure consistent surface temperature

**WARRANTY:** All models shown come with Vollrath's standard warranty against defects in materials and workmanship. For full warranty details, please refer to the Vollrath Equipment and Smallwares Catalog.

| Approvals | Date |
|---|---|
| | |


Setting the Standard™

www.vollrathco.com

The Vollrath Company, L.L.C.
1236 North 18th Street
Sheboygan, WI 53081-3201 U.S.A.
Customer Service: 800.628.0830
Canada Customer Service: 800.695.8560
Main Fax: 800.752.5620 or 920.459.6573

Technical Services: 800.628.0832
Technical Services Fax: 920.459.5462

# CAYENNE® MEDIUM-DUTY FLAT TOP GAS GRIDDLES

## MODELS

**40718 FTG9012 12" Gas Griddle, Manually Controlled**
**40719 FTG9016 18" Gas Griddle, Manually Controlled**
**40720 FTG9024 24" Gas Griddle, Manually Controlled**
**40721 FTG9036 36" Gas Griddle, Manually Controlled**
**40839 FTG9048 48" Gas Griddle, Manually Controlled**
**40840 FTG9060 60" Gas Griddle, Manually Controlled**
**40722 FTA1024 24" Gas Griddle, Thermostatically Controlled**
**40723 FTA1036 36" Gas Griddle, Thermostatically Controlled**

## DIMENSIONS

❑ Dimensions shown in inches (cm).

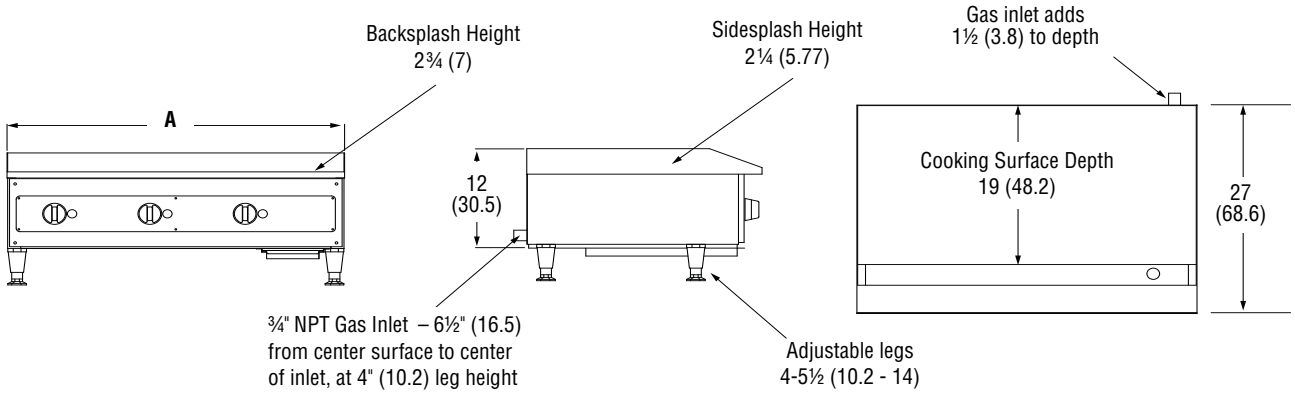


*Front View* *Side View* *Top View*

## SPECIFICATIONS

| Item | Output (BTU) | (A) Width | Cooking Surface Dimensions (W x D) | Number of Controls | Ship Weight Lb (Kg) |
|---|---|---|---|---|---|
| 40718 | 28,000 | 12 (30.5) | 11 11/16 x 19 (29.7 x 48.3) | 1 | 93 (42.1) |
| 40719 | 28,000 | 18 (45.7) | 17 11/16 x 19 (45 x 48.3) | 1 | 135 (61.2) |
| 40720 | 56,000 | 24 (61.0) | 23 11/16 x 19 (60.2 x 48.3) | 2 | 174 (78.9) |
| 40721 | 84,000 | 36 (91.4) | 35 11/16 x 19 (90.7 x 48.3) | 3 | 244 (110.7) |
| 40839 | 112,000 | 48 (121.9) | 47 11/16 x 19 (121.2 x 48.3) | 4 | 412 (186.9) |
| 40840 | 140,000 | 60 (152.4) | 59 11/16 x 19 (151.6 x 48.3) | 5 | 502 (227.7) |
| 40722 | 56,000 | 24 (61.0) | 23 11/16 x 19 (60.2 x 48.3) | 2 | 187 (84.8) |
| 40723 | 84,000 | 36 (91.4) | 35 11/16 x 19 (90.7 x 48.3) | 3 | 244 (110.7) |

The Vollrath Company, L.L.C.

VOLLRATH® Setting the Standard™

www.vollrathco.com

The Vollrath Company, L.L.C.
1236 North 18th Street
Sheboygan, WI 53081-3201 U.S.A.
Customer Service: 800.628.0830
Canada Customer Service: 800.695.8560
Main Fax: 800.752.5620 or 920.459.6573

Technical Services: 800.628.0832
Technical Services Fax: 920.459.5462

© 2011 The Vollrath Company L.L.C. Form Number L35822 6/11
Printed in USA