CMA DISHMACHINES

UC50e

High Temp Undercounter Dishwasher And Glasswasher

FEATURES:

- **Energy Star Qualified.**
- 30 racks / 120 covers per hour.
- Fully automatic cycle for easy operation
- Built-in detergent and rinse chemical pumps.
- Pump drain allows for multiple installation applications including elevated drains.
- Safety Temp feature assures 180°F sanitizing rinse every cycle.
- Built-in 6 kW booster heater
- 2.7 kW wash tank heater.
- Double skin stainless steel provides consistent heating and a quiet operation.
- Low 0.8 US gal. water usage per rack.
- Door and water level safety switches, plus booster safety thermostat.
- Stainless steel safety filters protect wash pump.
- Polished stainless steel surface and tanks with rounded corners for a total and easy cleaning.
- Operator friendly, removable stainless steel wash and rinse arms allows for easy cleaning.
- Triple filtering protection system, captures excess soil and debris.

Upper and lower wash and rinse arms guarantee excellent results.

Large 13-3/4" door clearance accommodates oversized plates, glasses and utensils.

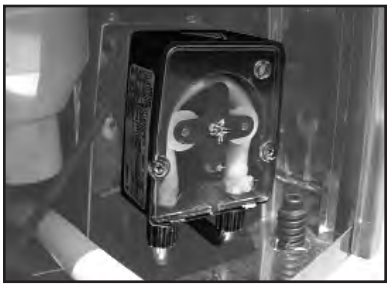

Built-in detergent and rinse chemical pumps.

Top mounted controls are easy to read and simple to operate.

CMA Dishmachines 12700 Knott Street Garden Grove, CA 92841• 800-854-6417 • 714-898-8781 • Fax: 714-895-2141 • www.cmadishmachines.com

CMA reserves the right to modify specifications or discontinue models without prior notification.

Printed in the U.S.A.

© 2009 CMA, Inc.

UC50e

High Temp Undercounter Dishwasher And Glasswasher

WARNING: Plumbing connections must be made by a qualified service company who will comply with all available Federal, State, and Local Health, Plumbing and Safety codes.

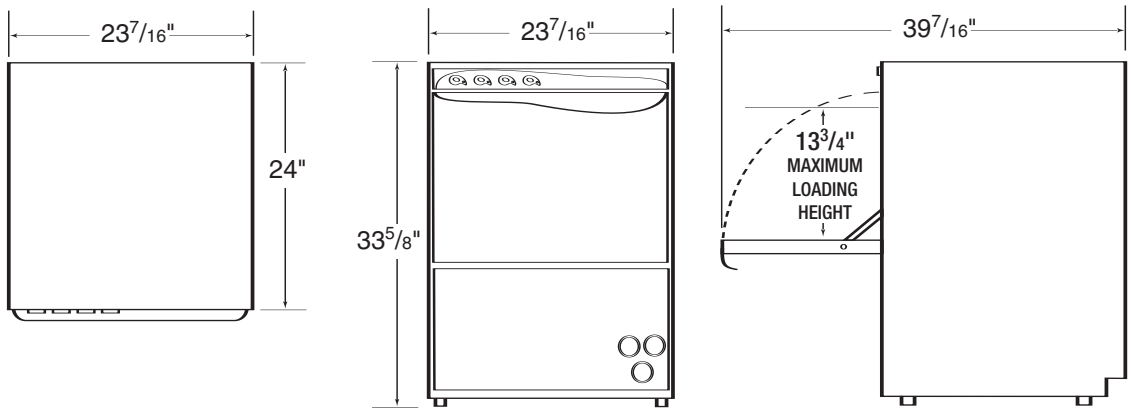

TOP VIEW FRONT VIEW SIDE VIEW

Specifications:

MODEL UC50	USA	METRIC
WATER CONSUMPTION		
PER RACK	.8 GAL	(3L)
PER HOUR	24/16 GAL	(90/60L)
OPERATING CYCLE		
WASH TIME-SEC	100/160	100/160
RINSE TIME-SEC	15/15	15/15
DWELL-SEC	5/5	5/5
TOTAL CYCLE-SEC	120/180	120/180
OPERATING CAPACITY		
RACKS PER HOUR	30/20	30/20
WASH TANK CAPCITY	6.87 GAL	(26L)
WATER REQUIRMENTS	140°F	(60°C)
WATER INLET	3/4"	
DRAIN CONNECTION	1"	
RINSE PRESSURE SET	24 PSI	1.7kg/cm²
CYCLE TEMPERATURES		
WASH-°F	155°F-160°F	(68°C/71°C)
RINSE-°F	180°F-195°F	(82°C/90°C)

	USA	METRIC
FRAME DIMENSIONS		
DEPTH	24"	(61 CM)
WIDTH	23-7/16"	(59.5 CM)
HEIGHT	33-5/16"	(84.5 CM)
MAXIMUM CLEARANCE HEIGHT FOR DISHES	13-3/4"	(35 CM)
STANDARD DISHRACK	1	1
DIMENSIONS	19-3/4"X19-3/4"	(50X50CM)
SHIPPING WEIGHT	165#	75(KG)
WASH PUMP MOTORS HP	3/4HP	
HEATERS		
WASH TEMP HEATER	2.7kW	
BOOSTER HEATER	6kW	

ELECTRICAL RATING	VOLTS	PHASE	AMPS
	208	1	28
	230	1	30

Summary Specifications:

The UC50e dishwasher and glasswasher is a front loading machine designed to produce sparkling clean glasses and dishes. Constructed of double walled stainless steel skin providing constant heating and a quiet operation. Standard features include upper and lower wash/rinse arms and wash and booster tank heater. Features include 13-3/4" door opening clearance, standard liquid detergent rinse-aid dispenser.

KROMO BRANDS
Distributed exclusively by CMA Dishmachines

CMA Dishmachines 12700 Knott Street Garden Grove, CA 92841• 800-854-6417 • 714-898-8781 • Fax: 714-895-2141 • www.cmadishmachines.com

CMA reserves the right to modify specifications or discontinue models without prior notification.

Printed in the U.S.A.

© 2009 CMA, Inc.