America's Oldest Stove Company
(Est.1838)

JOB _____ ITEM # _____

COUNTER TOP COMBINATIONS

FHP SERIES

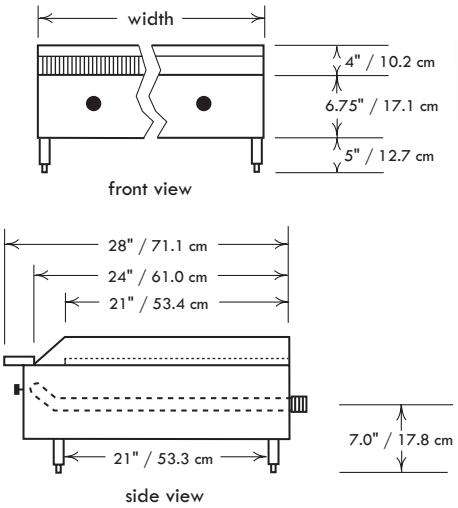

Standard Features, Benefits & Options

CONSTRUCTION: Easy cleaning, corrosion resistant stainless steel finish, welded with angle iron and aluminized inner framing. Sturdy 4″ heavy duty stainless pipe legs with adjustable feet. Stainless steel bullnose-rail is functional on which to set plates or utensils and also serves as control protection. Double wall construction with heavy insulation for cooler operation. Installation clearances for non-combustible surfaces are 0″ on the sides and 4″ in the rear. Char-broilers are approved for use in non-combustible locations only.

CONTROLS: Equipped with brass gas valves and automatic standing pilots. Pressure regulators are set at the factory for the gas specified. Optimal pressures are 4″ WC for natural gas and 10″ WC for propane. Manifold size is ¾″ NPT. All controls are tested and confirmed in good working order. Calibration and adjustments are the responsibility of the installer.

BURNERS: 12″ incremental griddle & char-broiler models feature cast iron "H" pattern burners, one for each 12″ increment; griddles are rated at 20,000 BTU ea. & char-broilers at 25,000 ea. Optional 35,000 BTU "H" char-broiler burners available. 18″ and 30″ griddle & char-broiler sections feature 2 and 4 straight burners respectively; griddles are rated at 18,000 BTU ea. & char-broilers at 20,000 ea. Open burners are cast iron without gaskets, rated at 24,000 BTU's and feature a large 7″ "star" flame pattern.

CHAR-GRATES: Cast iron top grate sections measure 20.5″ deep, designed with cast-in grease trough on each blade to allow grease run off into the front cold zone grease trough and reduces flare up. Each section is reversible for sloped or level grilling. Stainless steel splash guards on 3 sides graduating up to 4″ high. Grease drain slot is 3.5″ x 1″ and feeds into a large, removable grease drawer.

RADIANTS: Char-broiler radiants are either lava rock or heavy duty angle iron, inverted "V" type for superior uniform heating temperature. "V" type radiants are easily removable for cleaning.

OPEN TOP GRATES: Open burner grates are 12″ x 12″ solid cast iron with spillover bowl that also reflects heat to the cooking surface for added efficiency and designed for easy movement of pots across top sections.

GRIDDLE PLATE: Highly polished to minimize food sticking. ¾″ thick plate is standard, 1″ thick is available. 4″ high splash guard is standard. Higher sides are also available. 21¼″ deep cooking surface with front cold zone grease trough. Grease drain slot is 3.5″ x 1″ and feeds into a seamless, deep, removable grease drawer.

ACCESSORIES & OPTIONS: Thermostats, safety pilots, 1″ thick plates, grill scrapers, spatulas, cleaning supplies, chrome & grooved griddle plates, safety pilot controls, gas hoses, carrying handles, knob protectors and matching equipment stands.

SPECIFICATIONS

Model Number	Description	Width in./mm.	Approx. kg/lbs
FHP24-12-1LB	12″ griddle, 12″ lava-broiler	24 / 610	89 / 195
FHP36-24	2 open burners, 24″ griddle	36 / 914	120 / 265
FHP36-2RB	2 open burners, 24″ radiant-broiler	36 / 914	121 / 265
FHP36-18-1.5LB	18″ griddle, 18″ lava-broiler	36 / 914	127 / 280
FHP36-18-1.5RB	18″ griddle, 18″ radiant-broiler	36 / 914	127 / 280
FHP48-18-1.5LB	2, OB, 18″ griddle, 18″ lava-broiler	48 / 1219	155 / 340
FHP48-18-1.5RB	2, OB, 18″ griddle, 18″ radiant-broiler	48 / 1219	155 / 340
FHP48-30-1.5RB	30″ griddle, 18″ radiant char-broiler	48 / 1219	177 / 390
FHP48-24-2RB	24″ griddle, 24″ radiant-broiler	48 / 1219	166 / 365
FHP48-24-2LB	24″ griddle, 24″ lava-broiler	48 / 1219	182 / 400
FHP48-36	2 open burners, 36″ griddle	48 / 1219	161 / 355
FHP60-24-2LB	2 burners, 24″ griddle, 24″ lava-broiler	60 / 1524	223 / 490
FHP60-30-1.5RB	2 burners, 30″ grill, 18″ radiant-broiler	60 / 1524	214 / 470
FHP60-18-2.5LB	2 burners, 18″ grill, 30″ lava-broiler	60 / 1524	214 / 470
FHP60-30-2.5RB	2 burners, 30″ grill, 30″ radiant-broiler	60 / 1524	227 / 500

Popular models listed above, many other combinations available call factory for info.

Comstock-Castle Stove Co. • 119 W. Washington St. • Quincy, IL. 62301
Tel.: 217-223-5070 • Fax: 217-223-0007 • www.castlestove.com