America's Oldest Stove Company
(Est.1838)

JOB _____ ITEM # _____

GRIDDLES

FHP Series, 21″ Cook Depth

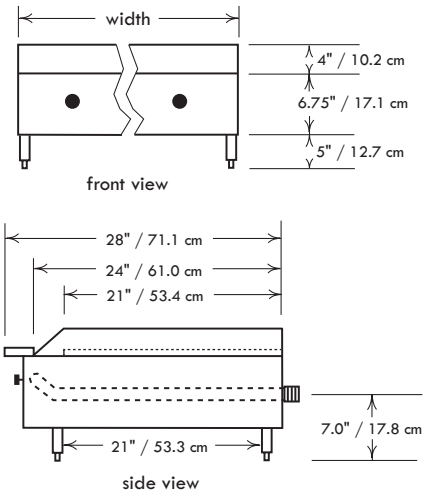

FHP24-24

FHP36-36

Standard Features, Benefits & Options

CONSTRUCTION: Easy cleaning, corrosion resistant stainless steel finish, welded with angle iron and aluminized inner framing. Sturdy 4″ heavy duty stainless pipe legs with adjustable feet. 4″ wide stainless steel bull nose landing across the front is a functional work area for service plates and work utensils as well as control protection. Double wall construction with heavy insulation for cooler operation. Installation clearances for non-combustible surfaces are 0″ on the sides and 0″ in the rear, combustible surfaces are 4″ on the sides and 5″ in the rear.

GRIDDLE PLATE: Highly polished to minimize food sticking. ¾″ thick plate is standard, 1″ thick is available. 4″ high splash guard is standard. Higher sides are also available. 21¼″ deep cooking surface with front, cold zone grease trough. Grease drain slot is 3.5″ x 1″ and feeds into a seamless, deep, removable grease drawer.

CONTROLS: Equipped with brass gas valves and automatic standing pilots. Pressure regulators are set at the factory for the gas specified. Optimal pressures are 4″ WC for natural gas and 10″ WC for propane. Manifold size is ¾″ NPT. All controls are tested and confirmed in good working order. Calibration and adjustments are the responsibility of the installer.

BURNERS: 12″ incremental griddles feature 20,000 BTU cast iron "H" pattern burners, one for each 12″ increment. 18″ & 30″ models feature 2 and 4 straight burners respectively, each rated at 18,000 BTU.

MATCH-UP: FHP Series griddles are designed to match up with FHP char-broilers and hot plates.

ACCESSORIES & OPTIONS: Thermostats, 1″ thick plates, chrome plating, grooved surfaces, safety pilot controls, gas hoses, grill scrapers, spatulas, cleaning supplies, carrying handles, knob protectors and matching equipment stands.

SPECIFICATIONS

Model Number	Width in./mm.	Sq. in. surface	Total BTU	Approx. kg/lbs
FHP12-12	12 / 305	255	20K	52 / 115
FHP18-18	18 / 457	383	36K	73 / 160
FHP18-18T	18 / 457	383	36K	75 / 165
FHP24-24	24 / 610	510	40K	93 / 205
FHP24-24T	24 / 610	510	40K	95 / 210
FHP30-30	30 / 762	638	72K	125 / 275
FHP30-30T	30 / 762	638	72K	127 / 280
FHP36-36	36 / 914	765	60K	130 / 285
FHP36-36T	36 / 914	765	60K	132 / 290
FHP48-48	48 / 1219	1020	80K	161 / 355
FHP48-48T	48 / 1219	1020	80K	166 / 365
FHP60-60	60 / 1524	1275	100K	211 / 465
FHP60-60T	60 / 1524	1275	100K	211 / 465
FHP72-72	72 / 1829	1530	120K	273 / 600
FHP72-72T	72 /1829	1530	120K	273 / 600

Comstock-Castle Stove Co. • 119 W. Washington St. • Quincy, IL. 62301
Tel.: 217-223-5070 • Fax: 217-223-0007 • www.castlestove.com