mcb-60

Cooking Surface (W x D)	58.0 x 21.0″	**Burners**	8	**BTUH**	129,000
Overall Dimension (W x D x H)	69.0 x 28.0 x 36.0″			**Actual Weight** (LBS)	215
Options (SHOWN)	Two RD30 roll domes			**Fuel**	Propane

For the larger caterer, golf club and hotel. This versatile grill converts into many different cooking systems. Your core investment keeps on working by adding from our extensive selection of accessories.

CROWN VERITY INC

Models

MCB-72 **MCB-36**
MCB-60 **MCB-30**
MCB-48 **CCB-60**

Mobile Outdoor Charbroilers

Specifications

Our grill bodies, legs, cooking grates, burners, under shelves, radiants, water pans, fasteners, pilot tubes, are all 304 series stainless steel for durability and ease of cleaning. Compared to units made of metal or 430 stainless steel – our units will never rust.

15,000 BTUH stainless steel burners are placed every 5.75" to ensure the most even heat pattern possible. These units heat up to cooking temperature within 6 minutes and will reach 800 degrees in 10 minutes. Our stainless steel burners and stainless steel cooking grids are warranted for 10 years!

Each MCB model includes built-in tank holders that accommodate standard 20 lb. propane tanks. Each model is also available with a single gas connection and 25' quick disconnect hose for use with remote tanks. Each MCB model is available as either LP or Natural Gas.

The CCB Club Grill comes with two horizontal 30 lb. propane tanks.

Specification:
Gas grill - must be constructed of 304 Stainless steel – including cooking grids, burners, and all fasteners. Burners to be 304 stainless steel and a minimum 15,000 BTUH per burner. Must have two 14" wheels and two total lock casters. Must ship fully assembled. Minimum of 10 year warranty on cooking grids and burners and minimum of 1 year warranty on complete unit. (MCB) Unit to include tank holder(s) to accommodate 20 lb propane tank(s). (CCB) Unit to include two 30 lb. horizontal propane tanks. Must have storage shelf under unit. Unit to include stainless steel water pan(s) with drain port(s). CGA/AGA/NSF certified.

Standard Features

- All stainless steel construction; including grids, burners, and fasteners.
- CGA/AGA/NSF certified.
- 15,000 BTUH stainless steel burners.
- Stainless steel pilot burner tube system.
- Unibody design for lighter weight and added strength.
- Two 14" wheels and two total lock casters.
- 14 ga. stainless steel radiants that remain in place during transportation and cleaning.
- Tank holder(s) on back of unit that hold 20 lb. propane tank(s).
- Two stage regulator(s) and hose(s) on LP models.
- Lighter and grill cleaner.
- Storage shelf and angled legs for rock solid durability.
- Water pans with drain ports to ease cleaning and eliminate grease fires from occurring.
- Ships completely assembled on a skid. Ready to use.
- Factory technician tested prior to shipping.
- 1 year parts and labor limited warranty.
- 10 year warranty on cooking grids and burners.

Options/Accessories

Roll Dome	Adjustable Bun Rack
Griddle Plate	Steam Pan Adapter
Side Shelf	Front Shelf
Side Burner	Rotisserie
Wind/Splash Guard	Smoker Box
Perforated Grill Plate	Charcoal Tray
Outdoor Cover	Removable Hand Sink
Remote Propane Cart	Propane Tanks

37 Adams Boulevard, Brantford, Ontario N3S 7V8 Phone: (519)751-1800 Fax: (519)751-1802
web site: http://www.crownverity.com **email: info@crownverity.com**

MODEL MCB

CROWN VERITY INC

Specifications

Model	MCB-30	MCB-36	MCB-48	MCB/CCB-60	MCB-72
Number of Burners	4	5	6	8	10
BTUH	64,500	79,500	99,000	129,000	159,000
Actual Weight (lbs.)	127	143	176	215	253
Gas Connections (LP)*	1	1	2	2	2
Shipping Weight (lbs.)	209	225	258	297	335
Cooking Surface Dimensions	28"L X 21"D	34"L X 21"D	46"L X 21"D	58"L X 21"D	70"L X 21"D
Overall Dimensions	38"L X 28"D X 36"H	44"L X 28"D X 36"H	56"L X 28"D X 36"H	69"L X 28"D X 36"H	81"L X 28"D X 36"H

*All units are available in natural gas models MCB-NG. All natural gas models come with a single gas connection and a 10 ft. quick disconnect hose.

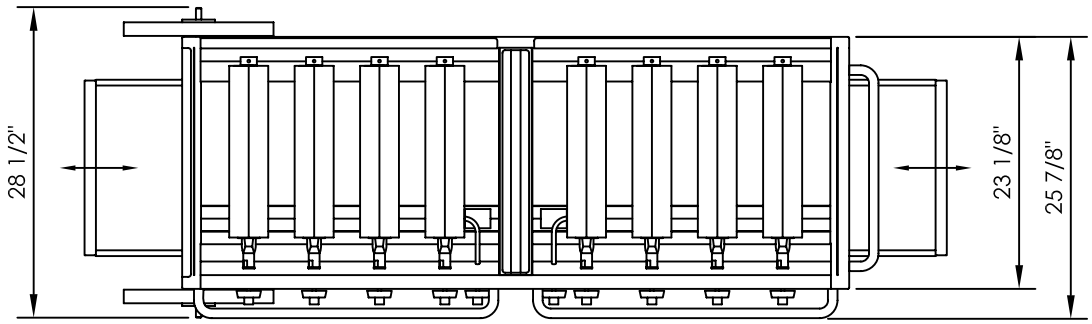
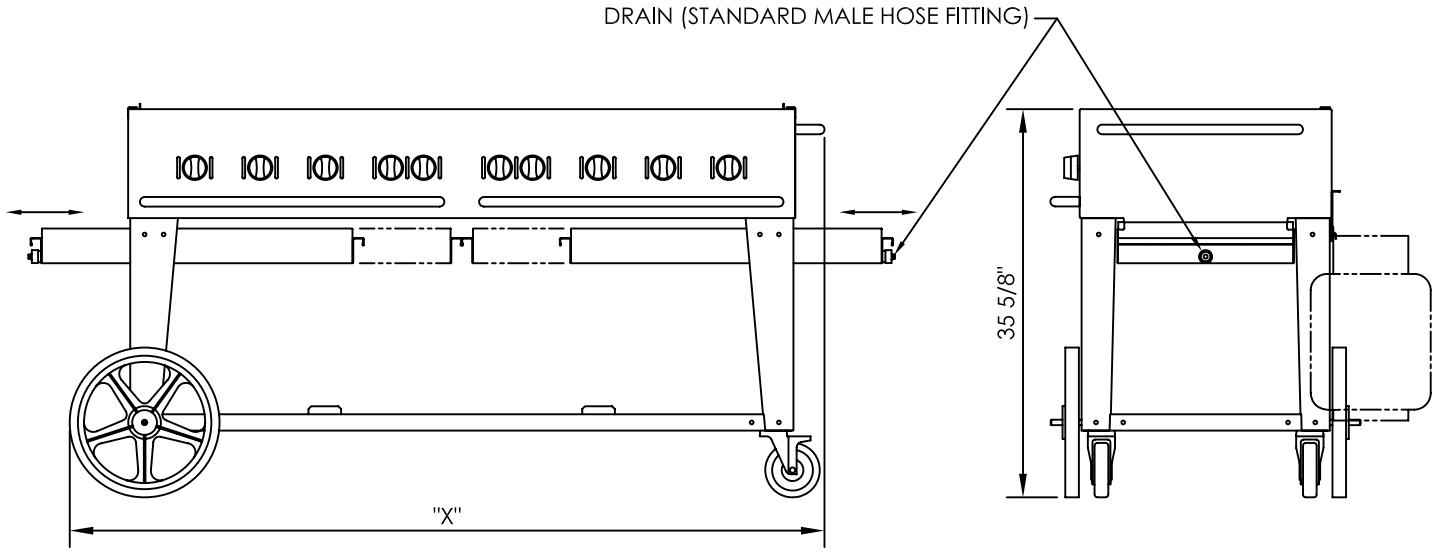
MCB-	"X"
30	38"
36	44"
48	56"
60	69"
72	81"