Profit from the Eagle Advantage®

Specification Sheet

Item No.: _____
Project No.: _____
S.I.S. No.: _____

One-Compartment Utility Sinks with Square Corner Construction

Short Form Specifications

Eagle One-Compartment Utility Sinks, model _____. Constructed of type 304 or 430 stainless steel with square corners, Euro-Style edging on front, and 8″ backsplash. All partitions have ⅝″ rolled top edge. Faucet holes punched on 8″ centers. All outside corners to be bullnosed for clean, safe edges. 1⅝″ O.D. galvanized tubular legs with adjustable bullet feet.

one-compartment utility sink

MODELS:

- ❑ ***1818-1-16/4***
- ❑ ***1818-1-16/3***
- ❑ ***1824-1-16/4***
- ❑ ***1824-1-16/3***
- ❑ ***2118-1-16/4***
- ❑ ***2118-1-16/3***
- ❑ ***2124-1-16/4***
- ❑ ***2124-1-16/3***
- ❑ ***2136-1-16/4***
- ❑ ***2136-1-16/3***
- ❑ ***2424-1-16/4***
- ❑ ***2424-1-16/3***
- ❑ ***2436-1-16/4***
- ❑ ***2436-1-16/3***
- ❑ ***2124-1-18-16/4***
- ❑ ***2124-1-18-16/3***
- ❑ ***2424-1-24-16/4***
- ❑ ***2424-1-24-16/3***

Options / Accessories

- ❑ Faucets
- ❑ Detachable drainboard *
- ❑ Lever waste
- ❑ Lever waste with overflow
- ❑ Stainless steel legs
- ❑ Stainless steel feet

* See Spec Sheet #**EG20.13E** for optional detachable drainboards.

Design and Construction Features:

- For numerous applications when NSF approval is not required (For NSF-approved utility sinks, add prefix "**N-**" to model number. Example: **N-**2424-1-16/3)
- Entire assembly is fused, welded and planished, providing a one-piece seamless sink unit.
- Welded areas are high-speed belt blended to match adjacent surfaces with continuity of satin finish.
- 34½″ to 35½″ (876 to 902mm) working height.
- Water supply is ½″ (13mm) IPS for hot and cold lines.

Top:

- All partitions have euro-style front edge.
- Available with detachable* or welded drainboards.
- 8″ (203mm) splash features 2″ (51mm) return to wall on 45° angle, with 1″ (25mm) upturn.
- 1⅛″ (29mm) faucet holes punched on 8″ (203mm) centers.

Legs:

- 1⅝″ (41mm)-diameter heavy-gauge galvanized tubing.
- High-impact corrosion-resistant 1″ (25mm) adjustable bullet feet.
- Leg locations fall directly under sink bowl, providing increased stability and maximum weight support.

Sink Bowl:

- 16 gauge type 304 or 430 stainless steel.
- 13¼″ (337mm)-deep compartment.
- 12-gauge leg gussets welded to a die-cut heavy-gauge reinforcing plate underneath sink bowl.
- Drain hole is 3½″ (89mm)-diameter, recessed, and complete with 1½″ (38mm) IPS basket-type waste drain, which is shipped loose.

EAGLE GROUP
100 Industrial Boulevard, Clayton, DE 19938-8903 USA
Phone: 302-653-3000 • Fax: 302-653-2065
www.eaglegrp.com

Foodservice Division: Phone 800-441-8440
MHC/Retail Display Divisions: Phone 800-637-5100

AutoQuotes
KCL

For custom configuration or fabrication needs, contact our **SpecFAB® Division.**
Phone: 302-653-3000 • Fax: 302-653-3091 • e-mail: specfab@eaglegrp.com

Spec sheets available for viewing, printing or downloading from our online literature library at *www.eaglegrp.com*

Eagle Foodservice Equipment, Eagle MHC, SpecFAB®, and Retail Display are divisions of Eagle Group. ©2009 by the Eagle Group

EAGLE GROUP®
Profit from the Eagle Advantage®

Item No.: _____
Project No.: _____
S.I.S. No.: _____

One-Compartment Utility Sinks with Square Corner Construction

Drain location for rough-in

bowl size in.	bowl size mm	Dimension A in.	Dimension A mm
18″	457	11″	279
21″	533	12½″	318
24″	610	14″	356
30″	762	17″	432

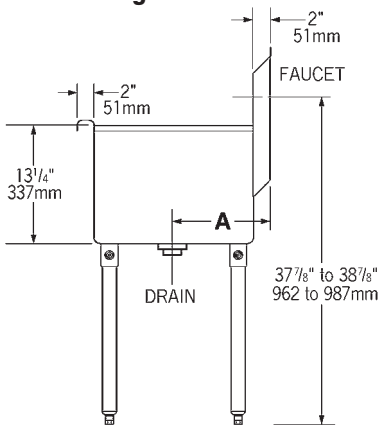

TYPICAL SIDE VIEW

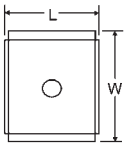

Sinks with No Drainboards

16 gauge type 430 stainless steel model #	16 gauge type 304 stainless steel model #	BOWL DIMENSIONS width in.	width mm	length in.	length mm	DRAINBOARD quantity	length in.	length mm	OVERALL DIMENSIONS width in.	width mm	length in.	length mm	weight lbs.	weight kg
1818-1-16/4	***1818-1-16/3***	18″	457	18″	457	0	n/a		22″	559	19⅜″	492	53	24.0
1824-1-16/4	***1824-1-16/3***	18″	457	24″	610	0	n/a		22″	559	25⅜″	645	56	25.4
2118-1-16/4	***2118-1-16/3***	21″	533	18″	457	0	n/a		25″	635	19⅜″	492	56	25.4
2124-1-16/4	***2124-1-16/3***	21″	533	24″	610	0	n/a		25″	635	25⅜″	645	59	26.8
2136-1-16/4	***2136-1-16/3***	21″	533	36″	914	0	n/a		25″	635	37⅜″	949	65	29.5
2424-1-16/4	***2424-1-16/3***	24″	610	24″	610	0	n/a		28″	711	25⅜″	645	60	27.2
2436-1-16/4	***2436-1-16/3***	24″	610	36″	914	0	n/a		28″	711	37⅜″	949	68	30.8

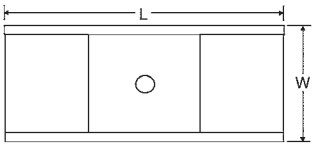

Sinks with Double Drainboards

16 gauge type 430 stainless steel model #	16 gauge type 304 stainless steel model #	BOWL DIMENSIONS width in.	width mm	length in.	length mm	DRAINBOARD quantity	length in.	length mm	OVERALL DIMENSIONS width in.	width mm	length in.	length mm	weight lbs.	weight kg
2124-1-18-16/4	***2124-1-18-16/3***	21″	533	24″	610	2	18″	457	25″	635	60¼″	1530	99	44.9
2424-1-24-16/4	***2424-1-24-16/3***	24″	610	24″	610	2	24″	610	28″	711	72¼″	1835	108	49.0

EAGLE GROUP
100 Industrial Boulevard, Clayton, DE 19938-8903 USA
Phone: 302-653-3000 • Fax: 302-653-2065
www.eaglegrp.com

Foodservice Division: Phone 800-441-8440
MHC/Retail Display Divisions: Phone 800-637-5100

Printed in U.S.A.
©2009 by Eagle Group
Rev. 06/09

Spec sheets available for viewing, printing or downloading from our online literature library at *www.eaglegrp.com*

Although every attempt has been made to ensure the accuracy of the information provided, we cannot be held responsible for typographical or printing errors. Information and specifications are subject to change without notice. Please confirm at time of order.