Garland

G Series 36" Gas Restaurant Range

Item: _____

Quantity: _____

Project: _____

Approval: _____

Date: _____

G Series 36" Gas Restaurant Range

Models:

- ☐ G36-6R
- ☐ G36-6S
- ☐ G36-6T
- ☐ G36-4G12R
- ☐ G36-2G24R
- ☐ G36-G36R
- ☐ G36-4G12S
- ☐ G36-2G24S
- ☐ G36-G36S
- ☐ G36-4G12T
- ☐ G36-2G24T
- ☐ G36-G36T

Model G36-6R

(shown with optioanlional casters)

NOTE: Ranges supplied with casters must be installed with an approved restraining device.

Standard Features:

- Large 27" (686mm) work top surface
- Stainless steel front and sides
- Stainless steel 5" (127mm) plate rail
- Stainless steel backguard, w/removable stainless steel shelf
- 12" (305mm) section stamped drip trays w/ dimpled bottom
- 6" (152mm) adj. stainless steel legs
- Large easy-to-use control knobs
- Gas regulator

Standard on Applicable Models:

- Open storage in lieu of oven, suffix S
- Modular top (Suffix T) with stainless steel low profile backguard & 4" (102mm) adjustable metal legs
- Ergonomic split cast iron top ring grates
- 33,000 Btuh/9.67 kW 2 piece cast iron Starfire- Pro open top burner
- 5/8" (15mm) thick steel griddle plate w/ manual hi/lo valve control, 23" (584mm) working depth surface, Standard on right, optional on left
- 4-1/4" (108mm) wide grease trough
- 18,000 Btuh/5.27 kW cast iron "H" style griddle burner per 12"(305mm) width of griddle
- 38,000 Btuh/ 11.13 kW cast iron "H" style oven burner
- Snap action modulating oven thermostat low to 500° F
- Nickel plated oven rack and 3-position removable oven rack guide
- Large porcelain oven interior, fits standard sheet pans in both directions for standard ovens
- Strong, keep-cool oven door handle
- Convection oven w/3 nickel plated oven racks and removable rack guides in lieu of standard oven w/ 1/3HP 120v 60 Hz single phase fan motor; change suffix R to C

Optional Features:

- ☐ Convection oven motor 240v 50/60HZ single phase
- ☐ Snap action modulating griddle control 175° to 425° F
- ☐ Hot top 12" (305mm) plate in lieu of two open burners, manual valve controlled w/18,000 Btuh/5.27 kW cast iron "H" burner standard on left side
- ☐ Low profile 9-3/8" (238mm) backguard stainless steel front and sides
- ☐ Additional oven racks
- ☐ 6" (152mm) levelling swivel casters (4), w/front locking
- ☐ Flanged deck mount legs
- ☐ Celsius temperature dials
- ☐ Piezo spark ignition for pilots on griddles
- ☐ Range mount salalamnders and cheesemelters are available for the oven and storage base models but not modular top (T) models

Specifications:

Gas restaurant series range with large capacity (standard) oven. 35 7/16" (900mm) wide, 27" (686mm) deep work top surfaces. Stainless steel front, sides and 5" wide front rail. 6" (152mm) legs with adjustable feet. Six Starfire-Pro 2 piece, 33,000 Btuh/ 9.67 kW (natural gas), cast open burners set in split cast iron ergonomic grates. Griddle or optional hot-top with cast iron "H" style burners, 18,000 Btuh/5.27 kW (natural gas), in lieu of open burners. One piece oven with porcelain interior and heavy duty, "keep cool" door handle. Heavy cast iron "H" oven burner rated 38,000 Btuh/11.13 kW (natural gas) Oven controlled by even bake, fast recovery snap action modulating oven thermostat. Available with convection oven, storage base or modular top model in lieu of oven.

C US

Garland Commercial Ranges Ltd.
1177 Kamato Road,
Mississauga, Ontario
L4W 1X4 CANADA

General Inquires 1-905-624-0260
USA Sales, Parts and Service 1-800-424-2411
Canadian Sales 1-888-442-7526
Canada or USA Parts/Service 1-800-427-6668

Manitowoc

Mission Restaurant Suppy - Webstore

G Series 36" Gas Restaurant Range

Garland

Model Number	Description	Total BTU/Hr Natural	Shipping Information	
			Lbs/Kg	Cu Ft [2]
G36-6R[1]	Six OB w/26" Oven	236,000	430/195	40
G36-6S	Six OBs w/SB	198,000	310/141	40
G36-6T	Six OB MT	198,000	190/86	22
G36-4G12R[1]	12" G, Four OB w/26" Oven	188,000	460/209	40
G36-4G12S	12" G Four OB w/SB	150,000	340/154	40
G36-4G12T	12" GFour OB MT	150,000	220/100	22
G36-2G24R[1]	24" G, Two OB w/26" Oven	140,000	495/225	40
G36-2G24S	24" G Two OB w/SB	102,000	375/170	40
G36-2G24T	24" GTwo OB MT	102,000	255/116	22
G36-G36R[1]	36" Gw/26" Oven	92,000	530/240	40
G36-G36S	36" G w/SB	54,000	410/186	40
G36-G36T	36" G MT	54,000	290/132	22

Burner Ratings (BTU/Hr/kW)		
Burner	Natural	Propane
Open	33,000/9.67	26,000/7.61
Griddle/Hot Top	18,000/5.27	18,000/5.27
Oven	38,000/11.13	32,000/9.38

Manifold Operating Pressure	
Natural	Propane
4.5" WC 11 mbar	10.0" WC 25 mbar

Gas input ratings shown for installations up to 2000 ft.,(610m) above sea level. Please specify altitudes over 2000 ft.

[1] Available with convection oven change R to C
[2] Ranges with Convention Ovens "C" are 57 Cu Ft
OB = Open Burner, SS = Space Saver
SB = Storage Base MT = Modular Top G = Griddle

This product is not approved for residential use.

Note: Installation clearance reductions are applicable only where local codes permit.

Model Type	Width	Depth[3]	Height w/LPBG[4]	Oven Interior		
				Height	Depth[5]	Width
Range Base	35-1/2" (900mm)	34-1/2" (876mm)	45-3/8" (1153mm)	13" (330mm)	26" (660mm)	26-1/4" (667mm)
Modular Top	35-1/2" (900mm)	34-1/2" (876mm)	25" (654mm)	N/A	N/A	N/A

[3] Convection oven base models add 3 7/8" (98mm) to the depth of the unit
[4] LPBG = Low Profile Backguard [5] Convection oven depth 22" (559mm)

Model Type	Combustible Wall Clearance		Entry Clearances	
	Sides	Rear	Crated	Uncrated
Range Base	14" (356mm)	6" (152mm)	37" (940mm)	36-1/2" (927mm)
Modular Top	14" (356mm)	6" (152mm)	16" (406mm)	12" (305mm)

Convection ovens with 120V, 60 Hz, 1 phase, 3.4 amps motors are supplied with 6'/1829mm cord and plug (NEMA 5-15P); 240V, 50/60 Hz, 1 phase motors are not supplied with cord and plug and must have direct connect.

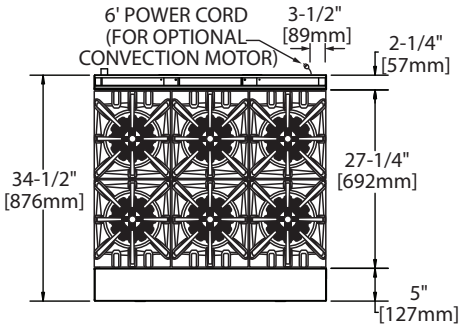

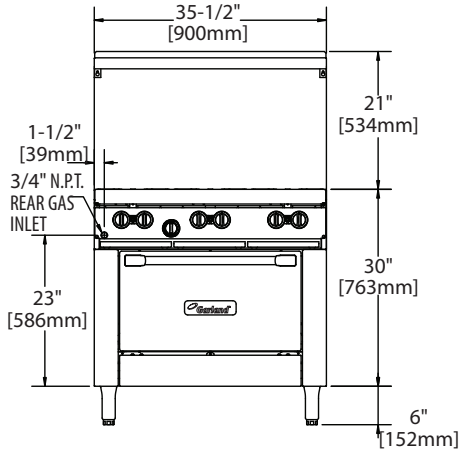

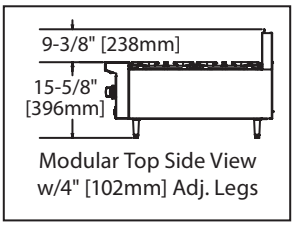

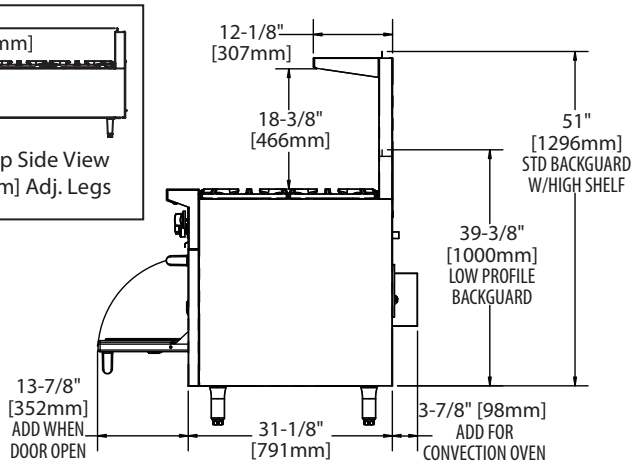

Form# G36 (11/26/14)

Garland Commercial Ranges Ltd.
1177 Kamato Road,
Mississauga, Ontario
L4W 1X4 CANADA

General Inquires 1-905-624-0260
USA Sales, Parts and Service 1-800-424-2411
Canadian Sales 1-888-442-7526
Canada or USA Parts/Service 1-800-427-6668

Manitowoc

Mission Restaurant Suppy - Webstore