Project Name:_____ AIA#:_____ Model #:_____

Location:_____ SIS#:_____ Item #:_____ Quantity:_____

3850N / 3975N Premium Heavy-Duty Automatic Slicers

Premium Models:

❒ 3850N Two Speed Auto Slicer
❒ 3975N Nine Speed Auto Slicer

Intertek 2010

Made in the U.S.A.

Certified by NSF International to go above and beyond standard performance!
NSF ANSI 8 2010 Standard

Premium Construction

- 13" *PreciseEdge*™ hardened steel alloy knife blade with Rockwell 60/62 hardness which maximizes tip-edge-holding ability
- Exclusive stainless steel construction, with superior corrosion resistance against acids found in fruit, meats and vegetables
- Best of the Best, *EZ-Glide*™ table
- No-drip base with Marine edge redirects liquids to center of base away from controls and operator
- Precise slice-thickness adjustment, one-piece handle, gear driven, and gasket-sealed
- Carriage angle: 45°, full gravity feed
- 2° angled drip groove on the slicer table directs the flow of liquids to the base
- 12" long chute with 3 lb. stainless steel end weight
- Powerful 1/2 HP, 7 amp continuous use motor
- High-performance gear knife drive
- Maintenance-free drive system
- Permanently attached knife ring guard with removable slice deflector

Food Zone Features

- Large stainless steel radii, open space base design for cleaning and simple dismantling of components
- Base has a Marine edge from 1/2" to 3/4" wide and indented areas with 3/16" deep radiused transition and 3/16" deep internal coved corners. Both are integral to the base's work surface
- Knife sharpening system is removable and BPA Free (no-bisphenol-A), immersible, and dishmachine-safe for cleaning and sanitizing
- Moisture proof, easy-to-clean direct contact start/stop touchpad controls
- Sealed splash zones for added sanitation and protection of electronics

Operator Protection Features

- No voltage release prevents inadvertent reactivation of slicer in the event of power or interlock interruption
- Knife cover interlock prevents slicer from operating without the knife cover in place
- Permanent knife blade ring guard, removable cover, and deflector.
- Touch pad start/stop controls and power indicator light
- Ergonomic low-profile design reduces operator fatigue
- Dual arm lift lever for cleaning and sanitizing under the slicer

Scan with your mobile device

GLOBE FOOD EQUIPMENT COMPANY
2153 Dryden Rd., Dayton, OH 45439
Phone: 937-299-5493 Fax: 937-299-4147
800-347-5423
www.globeslicers.com

Approved By: _____

Date: _____

GLOBE FOOD EQUIPMENT COMPANY

Premium Heavy-Duty Automatic Slicers 3850N / 3975N

Mission Restaurant Suppy - Webstore

Premium Heavy-Duty Automatic Slicers

3850N / 3975N

3850N / 3975N

Elevation / Front View

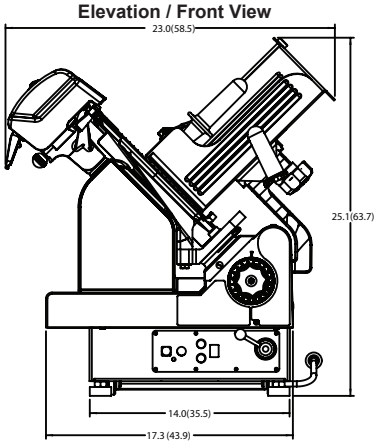

Side View

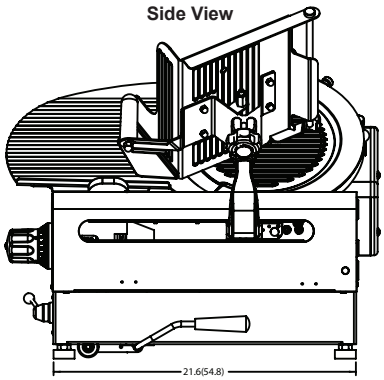

Plan / Top View

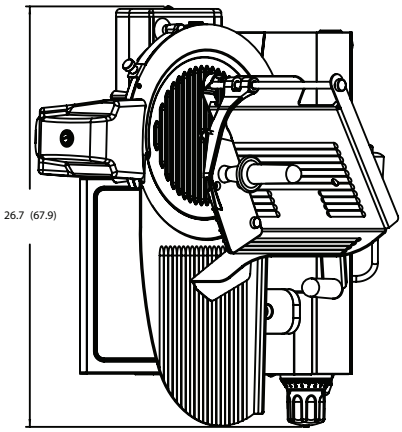

Side View/Lift Lever

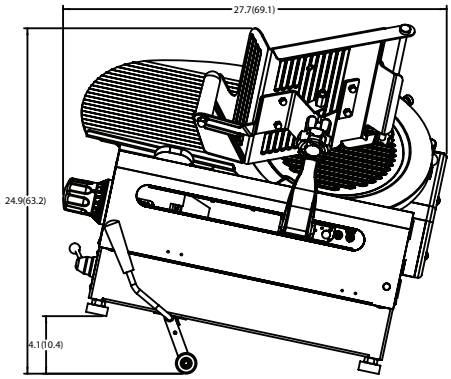

Note: Different chute options will change overall height

Drawings available through KCL. www.kclcad.com

Model	Elevation	Right	Plan	Back	BIM 3D	Revit
3850N						
3975N						

SPECIFICATIONS

Model	Auto or Manual	Motor	Volts	Amps	Drive Type	Slicing Volume per Day	Cheese Slicing	Blade Diameter	Max Slice	Product Cutting Capacity D (Diameter)	W (Width)	H (Height)
3850N	Both	1/2 HP	115-60-1	7	Gear	All Day	0 100% Time	13" (33.02 cm)	1-1/4" (3.18 cm)	7.5" (19.50 cm)	11.6" (29.46 cm)	9" (22.86 cm)
3975N	Both	1/2 HP	115-60-1	7	Gear	All Day	0 100% Time	13" (33.02 cm)	1-1/4" (3.18 cm)	7.5" (19.50 cm)	11.6" (29.46 cm)	9" (22.86 cm)

Cord & Plug: Attached 7 foot flexible 3-wire cord with molded plug fits a grounded receptacle. NEMA 5-15

FACTORY INSTALLED OPTIONS:

- ❒ *Quick-Clean*™ proprietary non-stick nickel-based coating (knife cover and slice table)
- ❒ Correctional package
- ❒ High moisture application package (includes 13" stainless steel knife)
- ❒ 15" long food chute
- ❒ 13" stainless steel knife

SLICER ENHANCEMENT ACCESSORIES:

- ❒ Stainless steel low food fence (12" L x 1 ⅜" H)
- ❒ Stainless steel high food fence (12" L x 3" H)
- ❒ 7" D x 14" L Stainless steel vegetable hopper
- ❒ Clear plastic slicer cover (Tip: Recommended for preconstruction)
- ❒ Additional cleaning brush

WARRANTY:

- 15 years on the knife drive gears
- Two-years parts
- One-year labor

Warranty valid in North America.
Contact factory for warranty in other countries

DIMENSIONS & SHIPPING INFORMATION

Freight Class 77.5

Cartons are reinforced for shipping. The weight and dimensions of this reinforced carton are included below, may vary from shipment to shipment and may include the weight from an attached skid.

Model	Foot Print	Overall Dimensions	Net Weight	Shipping Dimensions	Shipping Weight
3850N/ 3975N	14" D x 21.6" W (35.5 cm x 54.8 cm)	26.7" L x 23" W x 25.1" H (69.7 cm x 58.5 cm x 63.7 cm)	145 lbs. (67.1 kg)	28" L x 25" W x 34" H (71.1 cm x 63.5 cm x 86.4 cm)	172 lbs. (78 kg)

GLOBE FOOD EQUIPMENT COMPANY

www.globeslicers.com

2153 Dryden Rd.
Dayton, OH 45439
Phone: 937-299-5493
Phone: 800-347-5423
Fax: 937-299-4147

Printed in U.S.A. 06-2012

Ver. 1. 0612-B Rev. 0 GFE0612

Specifications are subject to change without notice.

Mission Restaurant Suppy - Webstore