Item # _____

Quantity _____

C.S.I. Section 11400

HOBART

701 S Ridge Avenue, Troy, OH 45374
1-888-4HOBART • www.hobartcorp.com

6115 PEELER

Peels 15-20 pounds of potatoes in one to three minutes – without even a single complaint! Load after load, the heavy duty design of the Hobart 6115 is specially created to handle the operator's potato peeling task, day in and day out, allowing your employees to concentrate on other work assignments.

STANDARD FEATURES

- ⅓ H.P. Motor with Manual Reset Thermal Overload Protection
- Satin Stainless Steel Finish Housing
- 4 Minute Timer
- Removable NSF Lexan Liner
- Removable 14¾" Silicon Carbide Abrasive Disk
- Stainless Steel Drive Shaft
- Removable Cam-Type Pressure Lock-In Hopper Door
- Heavy Duty Molded Polyester Plastic Lock-In Hopper Cover
- Resilient Buna S Rubber Trim Molding
- Rear Mounted Water Inlet with 5' Fill Hose
- Cord and Plug (115/60/1)

ACCESSORIES

- ❑ Cabinet Base and Peel Trap
- ❑ Portable Stand
- ❑ Peel Trap Basket

MODELS

- ❑ 6115 – 15 lb. capacity peeler with 4 minute timer

Specifications, Details and Dimensions on Inside and Back.

HOBART

6115 PEELER

6115
PEELER

HOBART
701 S Ridge Avenue, Troy, OH 45374
1-888-4HOBART • www.hobartcorp.com

SOLUTIONS / BENEFITS

Increased Productivity – eliminates mundane task of peeling; employees can be assigned to other responsibilities

Improves Yield – minimizes peel waste, providing increased portions per load

Reduces Labor – peels 15-20 pounds of potatoes and most root type vegetables in just 3 minutes

Easy to Clean – designed for fast and thorough cleaning procedures

Heavy Duty Molded Polyester Plastic Lock-In Hopper Cover

Durability, ease of cleaning

- Reinforced plastic molded, heavy-duty
- Easily removable for cleaning

Rear Mounted Water Inlet with 5' Fill Hose

Cleanability, meets plumbing codes

- Water from inlet strikes curved surface of hopper cover, promoting interior self-cleaning and preventing undesirable splash
- Sufficient height to meet plumbing codes

Satin Stainless Steel Finish Housing

Durability, easy clean-up

- Cylindrical construction heliarc-welded stainless steel

Four Minute Timer

Convenience, consistency, easy to use

- Simplistic four minute timer adjusts for any increments from ½ to 4 minutes; with 15 second markings on large timer dial for consistent results
- Only available in single phase

Silicon Carbide Abrasive Disk

Longevity of service, convenience, cleanability

- 14¾" diameter lightweight fiberglass reinforced plastic disk with silicon abrasive permanently bonded for high volume usage
- Easily and quickly removed for cleaning

Stainless Steel Drive Shaft

Durability and reliability

- Advanced design for long life and performance

Removable NSF Lexan Liner

Durability, easy to clean

- Easily and quickly removed for cleaning, offering a higher level of sanitation
- Peels faster and with higher quality

SPECIFICATIONS

MOTOR: ⅓ H.P., permanently lubricated sleeve bearings, capacitor-start, induction run type with manual reset thermal overload protection.

ELECTRICAL: 115/60/1 and 230/60/1 – UL Listed.

CORD AND PLUG: 5½ feet, 3 wire, flexible cord and plug for grounding (115/60/1).

DOUBLE V-BELT DRIVE: Speed reduction between motor and disc drive is obtained directly through dual V-belt. The stainless steel disc drive shaft is mounted in wide-spaced, oilless bushings. Permanently factory-sealed lubrication principle. Advanced design sealing prevents entrance of water into shaft bearings.

WEIGHT: Net weight 60 lbs. Domestic, carton-packed shipping weight 74 lbs.

PORTABLE STAND

This sturdy, free-rolling stand gives mobility to the Model 6115 Peeler eliminating lifting. Peeler can be kept in an out-of-the-way space when not in use and is easily moved to sink for operation.

CONSTRUCTION: Tubular steel frame – welded construction. Finish is black enamel. 6" rubber-tired wheels in rear on swivel casters, with friction brake in front.

DIMENSIONS: Floor space required 22" x 22½". Height to peeler support surface is 32½"; overall height 37½". Can be used with sinks of all heights up to 38".

WEIGHT: Net weight 16 lbs. Shipping weight 22 lbs.

PEEL TRAP BASKET

Basket is suspended from the discharge hose, inside the sink, to strain the peelings from the discharge water before reaching the drain. Can be used with the Model 6115 peeler when operated on a sink shelf or table – or with the portable stand (as illustrated at left).

CONSTRUCTION: Perforated steel, heavily tinned. A special clamp for the hose is furnished with the basket.

DIMENSIONS: 9½" long, 6¼" wide, 5" deep.

SHIPPING WEIGHT: 4 lbs.

DETAILS AND DIMENSIONS – MODEL 6115 PEELER

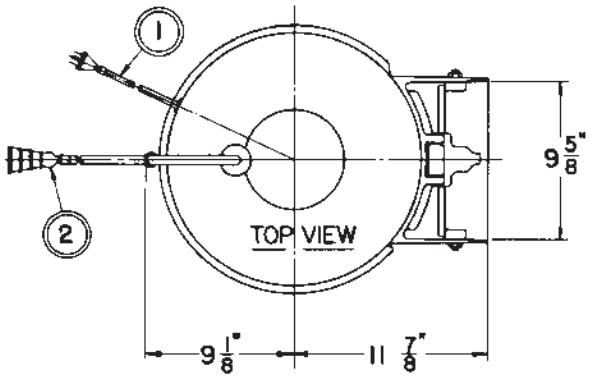

NET WEIGHT OF MACHINE	60 LBS.
DOMESTIC SHIPPING WT.	70 LBS.

STANDARD LOCATION FOR TIMER (OR SWITCH AS ORDERED) IS AT POSITION "A". MAY BE CHANGED TO POSITION "B" IN FIELD.

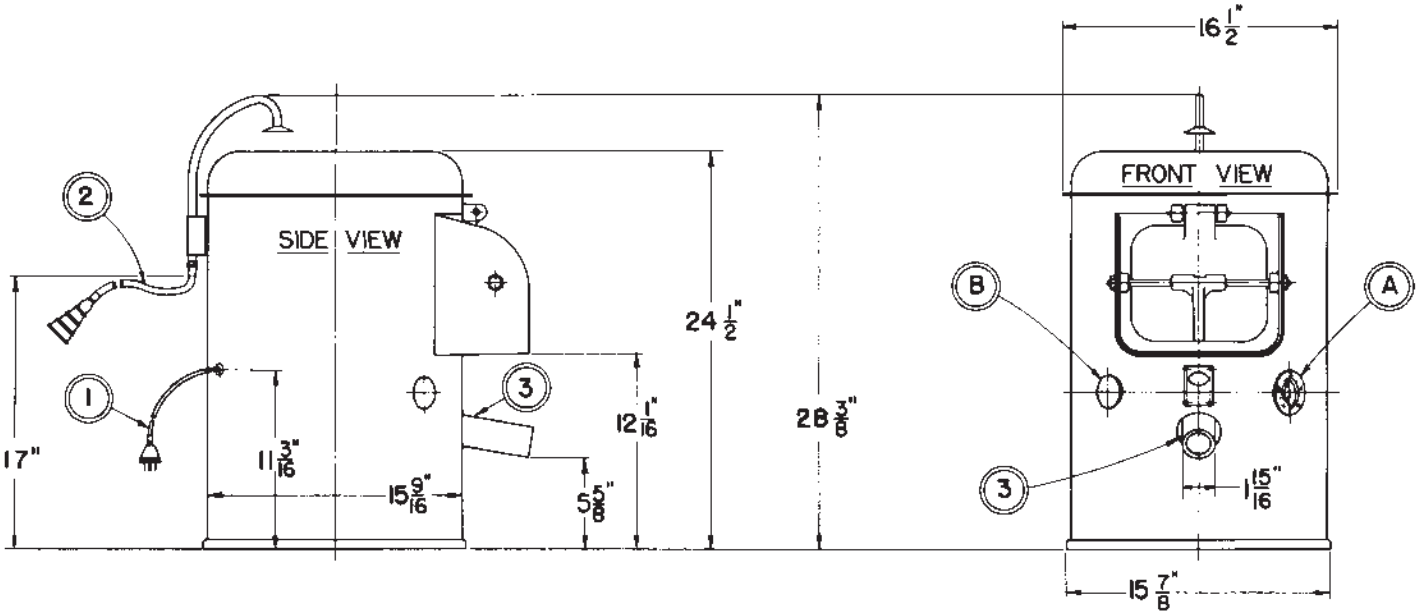

1	CORD & PLUG (APPROX. 5 1/2 FT. FROM SIDE OF THE MACHINE)
2	FILL HOSE (5/8" DIA.) EXTENDING 5 FT. FROM END OF FILL TUBE
3	DRAIN HOSE (1 15/16" DIA.)

S-63535

WARNING

ELECTRICAL AND GROUNDING CONNECTIONS MUST COMPLY WITH THE NATIONAL ELECTRICAL CODE AND/OR OTHER LOCAL ELECTRICAL CODES IN FORCE.

WARNING

PLUMBING CONNECTIONS MUST COMPLY WITH APPLICABLE SANITARY, SAFETY AND PLUMBING CODES IN FORCE.

HOBART
701 S Ridge Avenue, Troy, OH 45374
1-888-4HOBART • www.hobartcorp.com

DETAILS AND DIMENSIONS – CABINET BASE AND PEEL TRAP

NET WEIGHT OF PEELER 60 LBS.
DOMESTIC SHIPPING WT. (PEELER) 74 LBS.
NET WEIGHT OF CABINET BASE AND PEEL TRAP 38 LBS.
DOMESTIC SHIPPING WT. (CABINET BASE AND PEEL TRAP) 43 LBS.

NOTE: CABINET BASE AND PEEL TRAP SHIPPED IN CARTON SEPARATE FROM PEELER

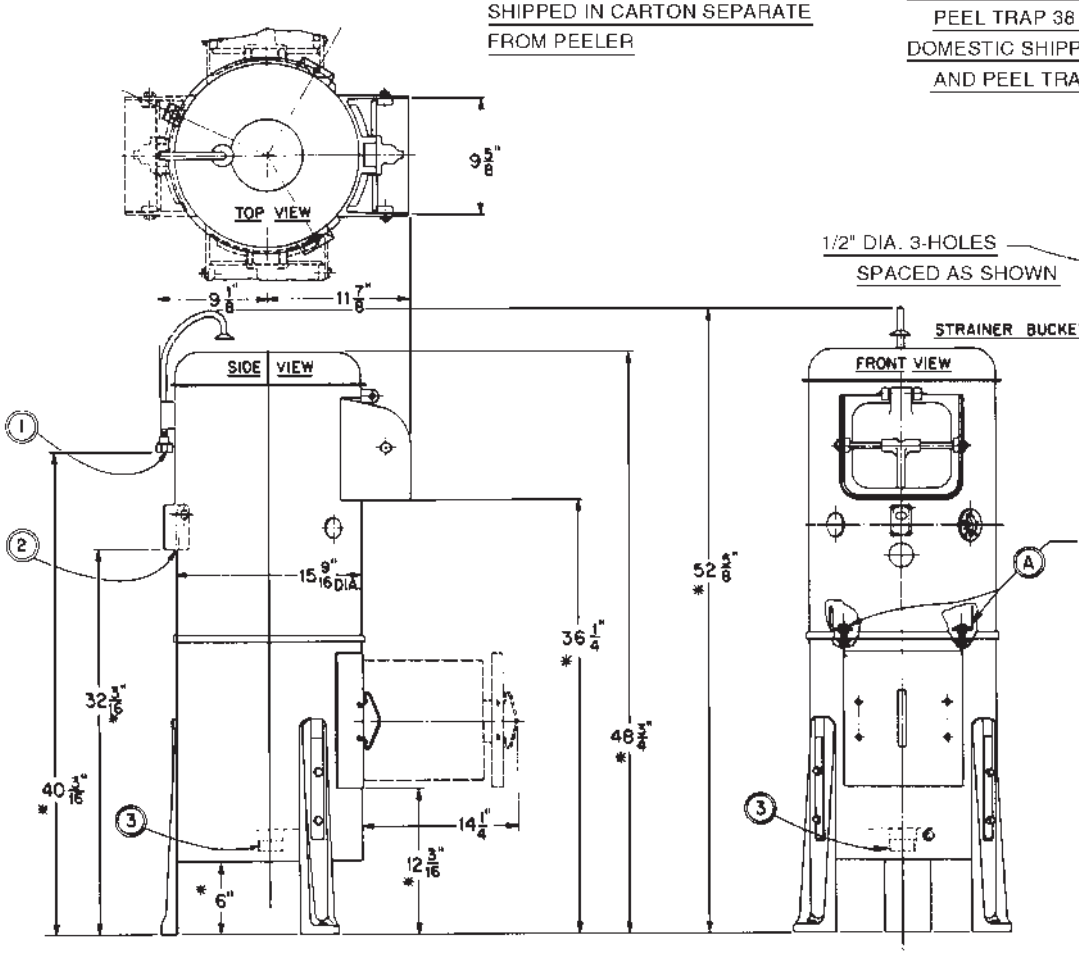

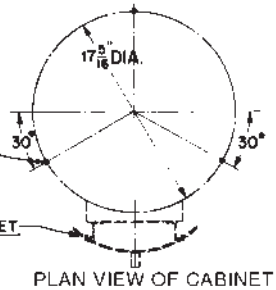

PLAN VIEW OF CABINET BASE AND PEEL TRAP SHOWING HOLES IN LEGS FOR USE IN FASTENING TO FLOOR – WHEN REQUIRED.

THE CABINET BASE AND PEEL TRAP IS SECURED TO THE PEELER AT "A" BY FOUR SCREWS. ASSEMBLY CAN BE MADE SO THAT PEELER WILL DISCHARGE IN ANY ONE OF THE FOUR POSITIONS AS SHOWN IN TOP VIEW.

1	FILL CONNECTION-STANDARD 1/2" FEMALE PIPE TH'D
2	ELEC. CONN.-7/8" DIA. KNOCKOUTS (FOR 1/2" CONDUIT) (BOX FURNISHED) TO BE ASSEMBLED TO MACHINE BY CUSTOMER.
3	DRAIN CONNECTION-2" STANDARD MALE PIPE TH'D

* THESE DIMENSIONS MAY INCREASE 2 1/2" DEPENDING ON LEG ADJUSTMENT

WARNING

ELECTRICAL AND GROUNDING CONNECTIONS MUST COMPLY WITH THE NATIONAL ELECTRICAL CODE AND/OR OTHER LOCAL ELECTRICAL CODES IN FORCE.

WARNING

PLUMBING CONNECTIONS MUST COMPLY WITH APPLICABLE SANITARY, SAFETY AND PLUMBING CODES IN FORCE.

As continued product improvement is a policy of Hobart, specifications are subject to change without notice.

Printed On Recycled Paper