Hoshizaki reserves the right to change specifications without notice.

Item # _____

Project: _____

Qty: _____

*AutoCad available on KCL

KM-260B_H

SELF-CONTAINED CUBER WITH BUILT-IN STORAGE BIN

KM-260B_H
9/09
Item # 13239

CUBER DIMENSIONS
W x D x H

KM-260B_H
30 x 28 x 39*
*with 6" legs

KM-260BAH
Air-Cooled
Shown

KM-260BWH
Water-Cooled

- Up to 268 lbs. of ice production per 24 hours
- Built-in 100 lbs. ice storage
- Individual crescent cube
- Durable stainless steel exterior
- CycleSaver® Design
- EverCheck® alert system
- Stainless steel evaporator
- Removable air filter (Air-cooled model only)
- Complies with California Energy Commission guidelines (CEC)
- R-404A Refrigerant

* The KM-260BAH is ENERGY STAR certified.

Warranty

Valid in United States, Canada, Puerto Rico, & U.S. Territories. Contact factory for warranty in other countries.

Three Year - Parts & Labor on entire machine.
Five Year - Parts & Labor on: Evaporator.
Five Year - Parts on: Compressor, air-cooled condenser coil.

© HOSHIZAKI AMERICA, INC.

618 Hwy. 74 S., Peachtree City, GA 30269 | TEL 1-800-438-6087 | FAX 1-800-345-1325 | www.hoshizaki.com

KM-260B_H
SELF-CONTAINED CUBER WITH BUILT-IN STORAGE BIN

DIMENSIONS
W x D x H
KM-260B_H
30 x 28 x 39*
*with 6" legs

- Air-cooled
- Water-cooled

AIR-COOLED

Water Temp° F.		50°	70°	90°
Air Temp° F.	70°	263	247	227
	80°	251	226	207
	90°	247	208	189

WATER-COOLED

Water Temp° F.		50°	70°	90°
Air Temp° F.	70°	268	259	242
	80°	261	247	228
	90°	259	237	218

UTILITY CONSUMPTION

Model Number	Ice Production Per Cycle Lbs.	Ice Production Per Cycle Cubes	KWH per 100 LBS. 90/70	Potable Water Gal. per 100 lbs.	Condenser Water Gal. per 100 lbs.
KM-260BAH	5	238	7.1	20.1	N/A
KM-260BWH	5	238	6.4	26.3	121

SPECIFICATIONS

Model Number	Condenser	Amperage	Shipping Weight
KM-260BAH	Air-Cooled	7.6	187 lbs.
KM-260BWH	Water-Cooled	7.5	187 lbs.

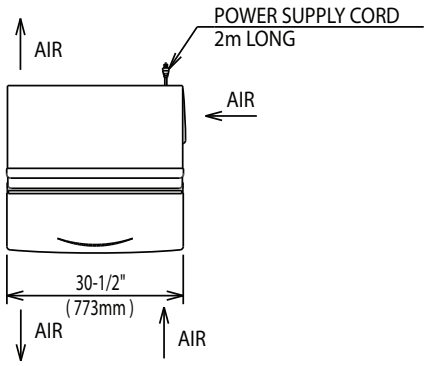

TOP VIEW

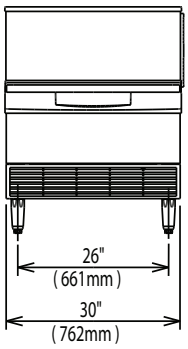

FRONT VIEW

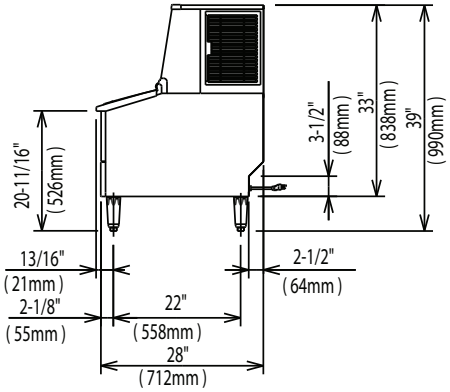

SIDE VIEW

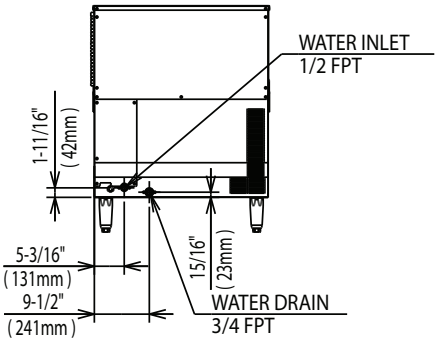

BACK VIEW / AIR-COOLED UNIT

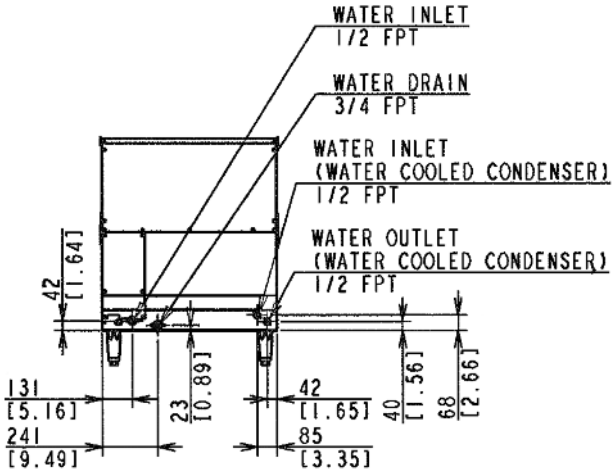

BACK VIEW / AIR-COOLED UNIT

ELECTRICAL & PLUMBING/KM-260B_H

- 115V/60/1
- 15 amp Max Fuse/HACR Breaker Size
- 3/8" OD copper or equivalent independent potable water supply
- 3/4" FPT independent drain connection
- 1/2" FPT water inlet

OPERATING LIMITS

• Ambient Temp Range	45 - 100°F
• Water Temp Range	45 - 90°F
• Water Pressure	10 - 113psig
• Voltage Range	104 - 127V

SERVICE

- Panels easily removed and all components accessible for service.
- Removable/cleanable air filters (Air-cooled model only)

© HOSHIZAKI AMERICA, INC.

618 Hwy. 74 S., Peachtree City, GA 30269 | TEL 1-800-438-6087 | FAX 1-800-345-1325 | www.hoshizaki.com | Printed in U.S.A.