robot coupe®

MMP 190 V.V.

D	
Pan capacity	up to 8 quarts

ALL STAINLESS STEEL BELL

Specially designed to process small amounts

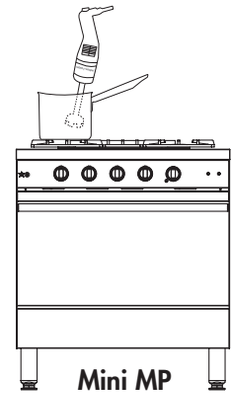

Mini MP

A SALES DESCRIPTION

Ideal for blending soups and puréeing fruit and vegetables. Specially designed for processing small amounts and for making sauces and emulsions

B TECHNICAL DESCRIPTION

MMP 190 V.V. power mixer. 120V/60/1. Power: 250 W. Variable speed: 2,000 - 12,500 rpm. 100% stainless-steel blades, bell and shaft (total length: 8")

C TECHNICAL CHARACTERISTICS

Effective output	250 W
Electrical data	120V/60/1 2.1 amps – plug supplied
Variable speed	2,000 - 12,500 rpm
Recyclability	95%
Net weight	5 lbs
Reference	MMP190 VV

E CHARACTERISTICS AND BENEFITS

MOTOR UNIT

- Power 250 W
- Stainless-steel motor unit with air vents in the top section to ensure watertightness
- Variable speed button for easy, visual adjustment
- Variable speed 2,000 - 12,500 rpm
- Automatic speed regulating system
- Special handle design for a better grip and effortless blending
- Emulsifying disc for making hot or cold sauces light and frothy

SHAFT AND BELL

- 100% stainless-steel blades, bell and shaft (total length: 8")
- Removable foot and blade, a Robot Coupe exclusive patented system for optimum sanitation.

STANDARD ATTACHMENTS

- Wall-mounted power mixer holder
- Tool for attaching and detaching the blades

STANDARDS
ETL electrical and sanitation Listed/ cETL (Canada)

ETL LISTED 3055441 Conforms to UL NSF/ANSI Std 763 Std 8 Certified to CAN/CSA Std C22.2 No.195

Robot Coupe USA, Inc.
264 South Perkins - Ridgeland, MS 39157
PH: 601-898-8411 - Toll free: 800-824-1646 - Fax: 601-898-9134
info@robotcoupeusa.com

robot coupe®

MMP 190 V.V.

F OPTIONAL ATTACHMENTS

Whisk attachment available as option on the
MMP 160 V.V., MMP 190 V.V. and MMP 240 V.V.

G DRAWINGS & DIMENSIONS
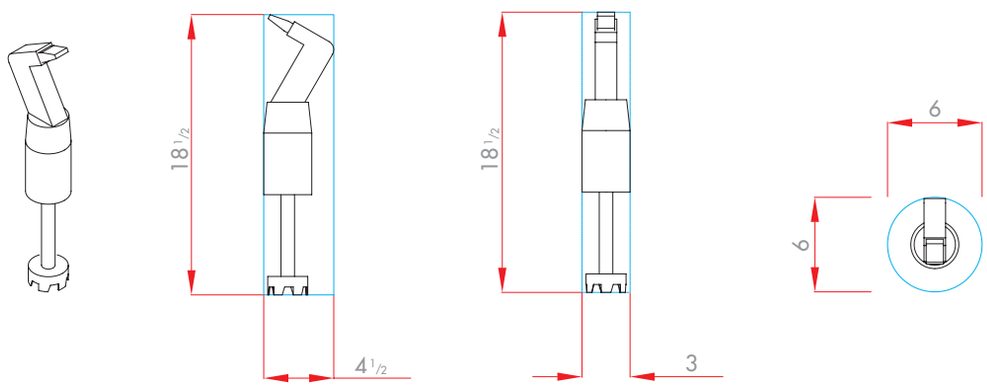
120V/60/1 – power cord and plug supplied