TRUE FOOD SERVICE EQUIPMENT, INC.
2001 East Terra Lane • O'Fallon, Missouri 63366-4434 • (636)240-2400
Fax (636)272-2408 • Toll Free (800)325-6152 • Intl Fax# (001)636-272-7546
Parts Dept. (800)424-TRUE • Parts Dept. Fax# (636)272-9471 • www.truemfg.com

Project Name: _____
Location: _____
Item #: _____ *Qty:* _____
Model #: _____

AIA #
SIS #

Model:
T-49-2-G-2

T-Series:
Reach-In Combination Half Swing Door Refrigerator

Scan code for video

T-49-2-G-2

- True's combination door reach-in's are designed with enduring quality that protects your long term investment.
- Designed using the highest quality materials and components to provide the user with colder product temperatures, lower utility costs, exceptional food safety and the best value in today's food service marketplace.
- Oversized, factory balanced, refrigeration system holds 33°F to 38°F (.5°C to 3.3°C) for the best in food preservation.
- Stainless steel solid half doors and front. The finest stainless available with higher tensile strength for fewer dents and scratches.
- Energy efficient, "Low-E", double pane thermal glass half doors.
- Adjustable, heavy duty PVC coated shelves.
- Positive seal self-closing doors. Lifetime guaranteed door hinges and torsion type closure system.

Bottom mounted units feature:

- "No stoop" lower shelf.
- Storage on top of cabinet.
- Compressor performs in coolest, most grease free area of kitchen.
- Easily accessible condenser coil for cleaning.

ROUGH-IN DATA

Specifications subject to change without notice.
Chart dimensions rounded up to the nearest ⅛" (millimeters rounded up to next whole number).

Model	Doors	Shelves	Cabinet Dimensions (inches) (mm) L	D†	H*	HP	Voltage	Amps	NEMA Config.	Cord Length (total ft.) (total m)	Crated Weight (lbs.) (kg)
T-49-2-G-2	4	6	54⅛ 1375	29¾ 756	78⅜ 1991	⅓ ½	115/60/1 230-240/50/1	5.8 5.4	5-15P ▲	9 2.74	475 216

† Depth does not include 1⅜" (35 mm) for door handle.
* Height does not include 5" (127 mm) for castors or 6" (153 mm) for optional legs.

▲ Plug type varies by country.

MADE IN U.S.A. SINCE 1945 · 5 YEAR COMPRESSOR WARRANTY USA · c UL us · NSF · CE

9/14 Printed in U.S.A.

APPROVALS:

AVAILABLE AT:

Model:

T-49-2-G-2

T-Series:

Reach-In Combination Half Swing Door Refrigerator

STANDARD FEATURES

DESIGN

- True's commitment to using the highest quality materials and oversized refrigeration systems provides the user with colder product temperatures, lower utility costs, exceptional food safety and the best value in today's food service marketplace.

REFRIGERATION SYSTEM

- Factory engineered, self-contained, capillary tube system using environmentally friendly (CFC free) 134A refrigerant.
- Extra large evaporator coil balanced with higher horsepower compressor and large condenser; maintains 33°F to 38°F (.5°C to 3.3°C) for the best in food preservation.
- Sealed, cast iron, self-lubricating evaporator fan motor(s) and larger fan blades give True reach-in's a more efficient low velocity, high volume airflow design. This unique design ensures faster temperature recovery and shorter run times in the busiest of food service environments.
- Bottom mounted condensing unit positioned for easy maintenance. Compressor runs in coolest and most grease free area of the kitchen. Allows for storage area on top of unit.

CABINET CONSTRUCTION

- Exterior - Stainless steel front. Anodized quality aluminum ends, back and top.
- Interior - attractive, NSF approved, white aluminum liner. Stainless steel floor with coved corners.
- Insulation - entire cabinet structure and solid doors are foamed-in-place using Ecomate. A high density, polyurethane insulation that has zero ozone depletion potential (ODP) and zero global warming potential (GWP).
- Welded, heavy duty steel frame rail, black powder coated for corrosion protection.
- Frame rail fitted with 4" (102 mm) diameter stem castors - locks provided on front set.

DOORS

- Solid half doors - stainless steel exterior with white aluminum liners to match cabinet interior. Glass half doors - "Low-E", double pane thermal glass assemblies with extruded aluminum frames. Door locks standard.
- Each solid door fitted with 12" (305 mm) long, lifetime guaranteed recessed handle. Each glass door fitted with 15" (381 mm) long extruded aluminum handle.
- Positive seal self-closing doors. Lifetime guaranteed door hinges and torsion type closure system.
- Magnetic door gaskets of one piece construction, removable without tools for ease of cleaning.

SHELVING

- Six (6) adjustable, heavy duty PVC coated wire shelves 24 9/16"L x 22 3/8"D (624 mm x 569 mm). Four (4) chrome plated shelf clips included per shelf.
- Shelf support pilasters made of same material as cabinet interior; shelves are adjustable on ½" (13 mm) increments.

LIGHTING

- Fluorescent interior lighting. Each glass half door utilizes full-length, patented, integrated door light (IDL) system. Safety shielded.

MODEL FEATURES

- Exterior temperature display.
- Evaporator is epoxy coated to eliminate the potential of corrosion.
- NSF-7 compliant for open food product.

ELECTRICAL

- Unit completely pre-wired at factory and ready for final connection to a 115/60/1 phase, 15 amp dedicated outlet. Cord and plug set included.

115/60/1
NEMA-5-15R

OPTIONAL FEATURES/ACCESSORIES

Upcharge and lead times may apply.

- ❑ 230 - 240V / 50 Hz.
- ❑ 6" (153 mm) standard legs.
- ❑ 6" (153 mm) seismic/flanged legs.
- ❑ Alternate door hinging (factory installed).
- ❑ Additional shelves.
- ❑ Half door bun tray racks. Each holds up to eleven 18"L x 26"D (458 mm x 661 mm) sheet pans (sold separately).
- ❑ Remote cabinets (condensing unit supplied by others; system comes standard with 404A expansion valve and requires R404A refrigerant). Consult factory technical service department for BTU information. All remote units must be hard wired during installation.

PLAN VIEW

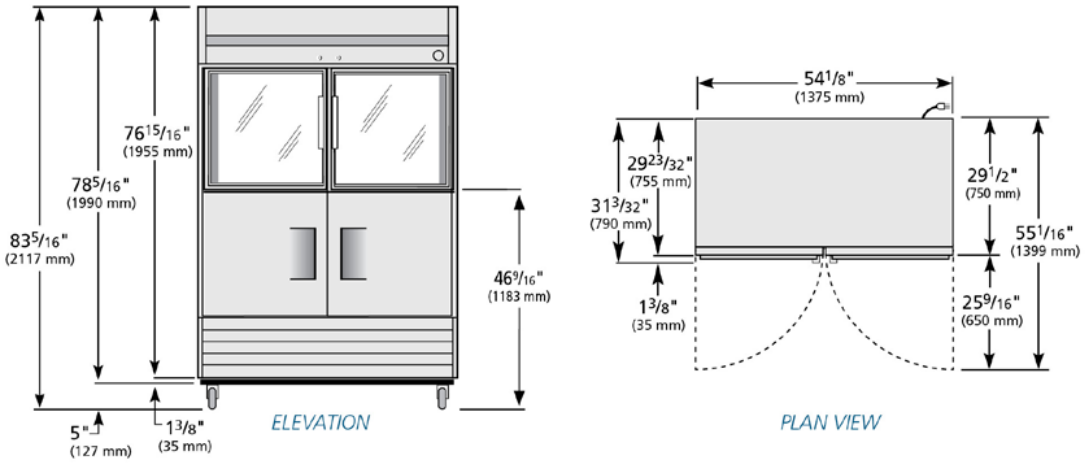

WARRANTY*
Three year warranty on all parts and labor and an additional 2 year warranty on compressor. (U.S.A. only)

*RESIDENTIAL APPLICATIONS: TRUE assumes no liability for parts or labor coverage for component failure or other damages resulting from installation in non-commercial or residential applications.

METRIC DIMENSIONS ROUNDED UP TO THE NEAREST WHOLE MILLIMETER

SPECIFICATIONS SUBJECT TO CHANGE WITHOUT NOTICE

Model	Elevation	Right	Plan	3D	Back
T-49-2-G-2	TFGY31E	TFGY09S	TFEY07P	TFGY313	

TRUE FOOD SERVICE EQUIPMENT

2001 East Terra Lane • O'Fallon, Missouri 63366-4434 • (636)240-2400 • Fax (636)272-2408 • Toll Free (800)325-6152 • Intl. Fax# (001)636-272-7546 • www.truemfg.com