TRUE FOOD SERVICE EQUIPMENT, INC.
2001 East Terra Lane • O'Fallon, Missouri 63366
(636)240-2400 • Fax (636)272-2408 • (800)325-6152 • Intl Fax# (001)636-272-7546
Parts Dept. (800)424-TRUE • Parts Dept. Fax# (636)272-9471 • www.truemfg.com

Project Name: _____
Location: _____
Item #: _____ *Qty:* _____
Model #: _____

AIA #
SIS #

Model:
TCGR-59

Display Case:
Curved Glass Refrigerated Bakery Case

TCGR-59

- True's refrigerated bakery case combines efficient, high volume merchandising and exceptional refrigeration with an elegant curved glass front for sophisticated presentation of high end desserts and pastries.
- Self-contained, environmentally friendly (CFC free) 134A refrigeration system.
- More efficient low velocity, high volume airflow design maintains 38°F to 40°F (3.3°C to 4.4°C) without drying out product. Ideally suited for delicate bakery products.
- Cabinet is NSF-7 certified to hold open food product.
- Insulated, double pane curved glass front and side glass panels provide extra large viewing area to maximize bakery product presentation. Front glass tilts forward for easy cleaning.
- Three (3) adjustable PVC coated shelves.
- Fluorescent lamps are low UV emitting to enhance product appearance and increase shelf life.
- Exterior front and sides standard with white laminate panels, five additional color options available at no charge. Stainless steel top.
- White aluminum interior sides and top. High impact plastic floor with coved corners.

ROUGH-IN DATA

Specifications subject to change without notice.
Chart dimensions rounded up to the nearest ⅛" (millimeters rounded up to next whole number).

Model	Doors	Shelves	Cabinet Dimensions (inches) (mm) L	D†	H	HP	Voltage	Amps	NEMA Config.	Cord Length (total ft.) (total m)	Crated Weight (lbs.) (kg)
TCGR-59	2	3	59⅞ 1521	35½ 902	47⅞ 1217	½ N/A	115/60/1	15.8 N/A	5-20P	9 2.74	670 304

† Depth does not include ¾" (18 mm) for door handles.

MADE IN U.S.A. SINCE 1945 · 5 YEAR COMPRESSOR WARRANTY USA · c UL us · NSF

8/14 Printed in U.S.A.

APPROVALS:

AVAILABLE AT:

Model:

TCGR-59

Display Case:

Curved Glass Refrigerated Bakery Case

STANDARD FEATURES

DESIGN

- True's refrigerated bakery case combines efficient, high volume merchandising and exceptional refrigeration with an elegant curved glass front for sophisticated presentation of high end desserts and pastries.
- Designed to provide an attractive companion to our "dry" display case.

REFRIGERATION SYSTEM

- Factory engineered, self-contained, capillary tube system using environmentally friendly (CFC free) 134A refrigerant.
- Extra large evaporator coil balanced with higher horsepower compressor and large condenser maintains 38°F to 40°F (3.3°C to 4.4°C), ideally suited for bakery products.
- Forced-air refrigeration system; sealed, cast iron, self-lubricating evaporator fan motor(s) and larger fan blades give True refrigerated bakery cases a more efficient low velocity, high volume airflow design.
- Condensing unit located behind removable panel in back of unit; slides out for easy cleaning and maintenance.

CABINET CONSTRUCTION

- Exterior - white laminate front and side panels. Color options available at no charge:

Walnut | Teak | Oak | Beige | Black | White

- All laminate (and stainless option) ships separately from unit and is field installed. Stainless steel top. Black front and rear grills and trim. Template kit available at no charge for field customization of laminate.
- Interior - NSF approved white aluminum sides and top; high impact plastic floor with coved corners.
- Insulation - entire cabinet structure is foamed-in-place using Ecomate. A high density, polyurethane insulation that has zero ozone depletion potential (ODP) and zero global warming potential (GWP).
- Welded, heavy duty steel frame rail, black powder coated for corrosion protection.
- Frame rail fitted with leg levelers.

CURVED FRONT DISPLAY GLASS

- Insulated, double pane curved glass front and side panels provide extra large viewing area to maximize bakery product presentation. Exterior pane is tempered for safety.
- Front glass tilts forward for easy cleaning.

REAR DOORS

- "Low-E", double pane thermal glass rear door inserts with mitered plastic channel frames.
- Each door fitted with 12" (305 mm) long molded plastic handle.
- Self-closing doors, efficient counter balanced weight system for smooth, even, positive closure. Sliding doors ride on stainless steel V-channel with stainless steel bearings. Doors fit within plastic channel frame.

SHELVING

- Three (3) adjustable, lighted, heavy duty PVC coated wire shelves 53⅜"L x 22$^{5}/_{32}$"D (1356 mm x 563 mm). Shelving system is cantilevered and angle can be adjusted to maximize presentation.
- Each shelf supports a maximum weight of 150 lbs. (69 kg).

PAN CAPACITY

- Cabinet holds twelve (12) 18"L x 26"D (458 mm x 661 mm) display pans (3 per level).

LIGHTING

- Cabinet equipped with four (4) light sources for maximum product display; three (3) shelf mounted and one (1) cabinet mounted. Fluorescent lamps are low UV emitting to enhance product appearance and increase shelf life.
- Safety shielded lighting tubes assure longer, brighter, shadow-free product illumination.

MODEL FEATURES

- Evaporator is epoxy coated to eliminate the potential of corrosion.
- Five (5) amp exterior scale receptacle.
- Recessed exterior light switch and thermostat control.
- NSF-7 compliant for open food product.

ELECTRICAL

- Unit completely pre-wired at factory and ready for final connection to a 115/60/1 phase, 20 amp dedicated outlet. Cord and plug set included.

115/60/1
NEMA-5-20R

RECOMMENDED OPERATING CONDITIONS

- TCGR refrigerated models are designed to operate in an environment where temperature and humidity do not exceed 75°F (24°C) and 55% relative humidity.

OPTIONAL FEATURES/ACCESSORIES

Upcharge and lead times may apply.

- ❑ 6" (153 mm) standard legs.
- ❑ 6" (153 mm) seismic/flanged legs.
- ❑ 2½" (64 mm) diameter castors.
- ❑ Custom exterior laminates, contact factory for details. See our website: www.truemfg.com for the latest color offerings.
- ❑ Stainless steel exterior (field installed).
- ❑ Mirrored interior ends with laminate exterior.
- ❑ Additional non-lighted shelves.
- ❑ Remote cabinets (condensing unit supplied by others; system comes standard with 404A expansion valve and requires R404A refrigerant). Consult factory technical service department for BTU information. All remote units must be hard wired during installation.

PLAN VIEW

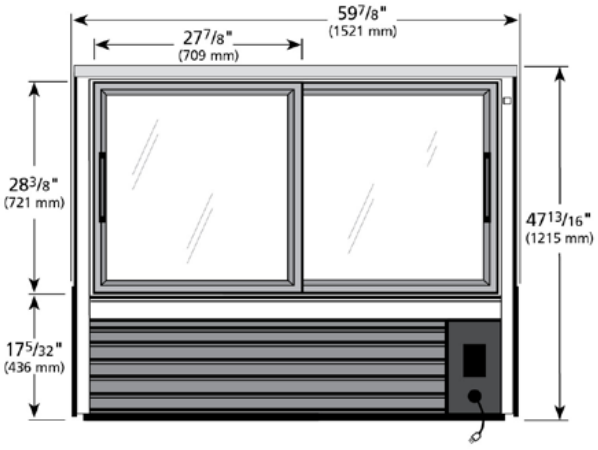

BACK VIEW

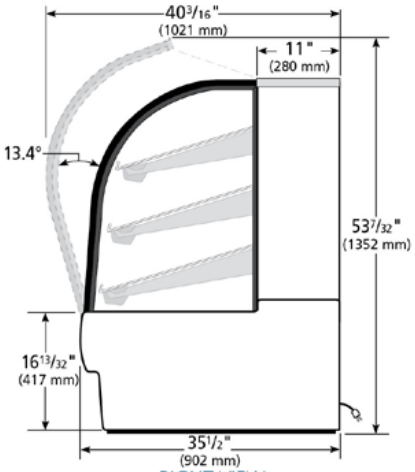

RIGHT VIEW

WARRANTY*
Three year warranty on all parts and labor and an additional 2 year warranty on compressor. (U.S.A. only)

*RESIDENTIAL APPLICATIONS: TRUE assumes no liability for parts or labor coverage for component failure or other damages resulting from installation in non-commercial or residential applications.

METRIC DIMENSIONS ROUNDED UP TO THE NEAREST WHOLE MILLIMETER

SPECIFICATIONS SUBJECT TO CHANGE WITHOUT NOTICE

Model	Elevation	Right	Plan	3D	Back
TCGR-59	TFD077E	TFD055S	TFD077P	TFD0773	TFD077B

TRUE FOOD SERVICE EQUIPMENT

2001 East Terra Lane • O'Fallon, Missouri 63366-4434 • (636)240-2400 • Fax (636)272-2408 • Toll Free (800)325-6152 • Intl. Fax# (001)636-272-7546 • www.truemfg.com