**TRUE FOOD SERVICE EQUIPMENT, INC.**
2001 East Terra Lane • P.O. Box 970 • O'Fallon, Missouri 63366
(636)240-2400 • Fax (636)272-2408 • (800)325-6152 • Intl Fax# (001)636-272-7546
Parts Dept. (800)424-TRUE • Parts Dept. Fax# (636)272-9471 • www.truemfg.com

*Project Name:* _____
*Location:* _____
*Item #:* _____ *Qty:* _____
*Model #:* _____

*AIA #*
*SIS #*

Model:
**TMC-49-SS**

# Milk Coolers:
*White Vinyl and Stainless Steel Exterior/Stainless Steel Interior*

## TMC-49-SS

- True's commitment to using the highest quality materials and oversized refrigeration systems provides the user with colder product temperatures, and lower utility costs in an attractive, durable school milk cooler.
- Oversized, forced-air refrigeration system maintains milk temperatures of 33°F to 38°F (.5°C to 3.3°C). Colder holding temperatures provide better tasting milk, increased sales and less product waste.
- Exterior - non-peel or chip white laminated vinyl front, sides, back and top; durable and permanent.
- All stainless steel self-service doors feature convenient drop front and "hold-open" flip-up top. Standard with door locks.
- Interior - Stainless steel walls and reinforced floor.
- Standard with heavy duty floor racks and convenient clean out drain.
- Designed to hold Twelve 13"L x 13"D x 11⅛"H (331 mm x 331 mm x 296 mm) milk crates.
- Entire cabinet structure is foamed-in-place using Ecomate. A high density, polyurethane insulation that has zero ozone depletion potential (ODP) and zero global warming potential (GWP).

## ROUGH-IN DATA

Specifications subject to change without notice.
Chart dimensions rounded up to the nearest ⅛" (millimeters rounded up to next whole number).

| Model | Doors | Capacity | Crate Dimensions (inches) (mm) | | | Floor Racks | Cabinet Dimensions (inches) (mm) | | | HP | Voltage | Amps | NEMA Config. | Cord Length (total ft.) (total m) | Crated Weight (lbs.) (kg) |
|---|---|---|---|---|---|---|---|---|---|---|---|---|---|---|---|
| | | Crates | L | D | H | | L** | D† | H* | | | | | | |
| TMC-49-SS | 2 | 12 | 13 | 13 | 11⅝ | 3 | 49 | 33⅜ | 41½ | ⅓ | 115/60/1 | 6.8 | 5-15P | 9 | 445 |
| | | | 331 | 331 | 296 | | 1245 | 848 | 1055 | ⅓ | 230-240/50/1 | 4.2 | ▲ | 2.74 | 202 |

** Length does not include⅛" (4 mm) each side for lid pins.
† Depth does not include 1" (26 mm) for front bumpers.
* Height does not include 5⅛" (131 mm) for castors.

▲Plug type varies by country.

8/14 Printed in U.S.A.

*APPROVALS:*

*AVAILABLE AT:*

Model:

**TMC-49-SS**

# Milk Coolers:

*White Vinyl and Stainless Steel Exterior/Stainless Steel Interior*

## STANDARD FEATURES

### DESIGN

- True's commitment to using the highest quality materials and oversized refrigeration systems provides the user with colder product temperatures, and lower utility costs in an attractive, durable school milk cooler.

### REFRIGERATION SYSTEM

- Factory engineered, self-contained, capillary tube system using environmentally friendly (CFC free) 134A refrigerant.
- Extra large evaporator coil balanced with higher horsepower compressor and large condenser; maintains milk temperatures of 33°F to 38°F (.5°C to 3.3°C). Colder holding temperatures provide better tasting milk, increased sales and less product waste.
- Sealed, cast iron, self-lubricating evaporator fan motor(s) and larger fan blades give True milk coolers a more efficient low velocity, high volume airflow design. This unique design ensures colder holding temperatures and faster recovery in high use situations.
- Condensing unit accessed from behind back grill, slides out for easy cleaning and maintenance.

### CABINET CONSTRUCTION

- Exterior - non-peel or chip white vinyl front, sides, back and top; durable and permanent. Stainless steel service doors.
- Interior - Stainless steel walls and reinforced floor. Standard with heavy duty floor racks.
- Insulation - entire cabinet structure is foamed-in-place using Ecomate. A new, innovative, high density, polyurethane insulation that has zero ozone depletion potential (ODP) and zero global warming potential (GWP).
- Welded, heavy duty steel frame rail, black powder coated for corrosion protection.
- Frame rail fitted with four (4) easy roll, 4" (102 mm) diameter swivel castors (front castors lock in place).
- Designed to hold Twelve 13"L x 13"D x 11⅛"H (331 mm x 331 mm x 296 mm) milk crates.

### DOORS

- All stainless steel self-service doors feature convenient drop front and "hold-open" flip-up top. Door support bumpers standard.
- Door locks standard.
- Magnetic door gaskets of one piece construction, removable without tools for ease of cleaning.

### MODEL FEATURES

- Exterior digital temperature display.
- Evaporator is epoxy coated to eliminate the potential of corrosion.
- Convenient clean out drain with ½" (13 mm) NPT-PVC drain plug.
- Listed under NSF-7 for the storage and/or display of packaged or bottled product.

### ELECTRICAL

- Unit completely pre-wired at factory and ready for final connection to a 115/60/1 phase, 15 amp dedicated outlet. Cord and plug set included.

115/60/1
NEMA-5-15R

### OPTIONAL FEATURES/ACCESSORIES

Upcharge and lead times may apply.

- ❑ 230 - 240V / 50 Hz.
- ❑ A variety of exterior color options available, see www.truemfg.com for latest offerings.
- ❑ 6" (153 mm) standard legs (mounting plates required).
- ❑ 6" (153 mm) seismic/flanged legs (mounting plates required).
- ❑ Corner bumpers.
- ❑ See www.truemfg.com for school milk profit calculator.
- ❑ Remote cabinets (condensing unit supplied by others; system comes standard with 404A expansion valve and requires R404A refrigerant). Consult factory technical service department for BTU information. All remote units must be hard wired during installation.

## PLAN VIEW

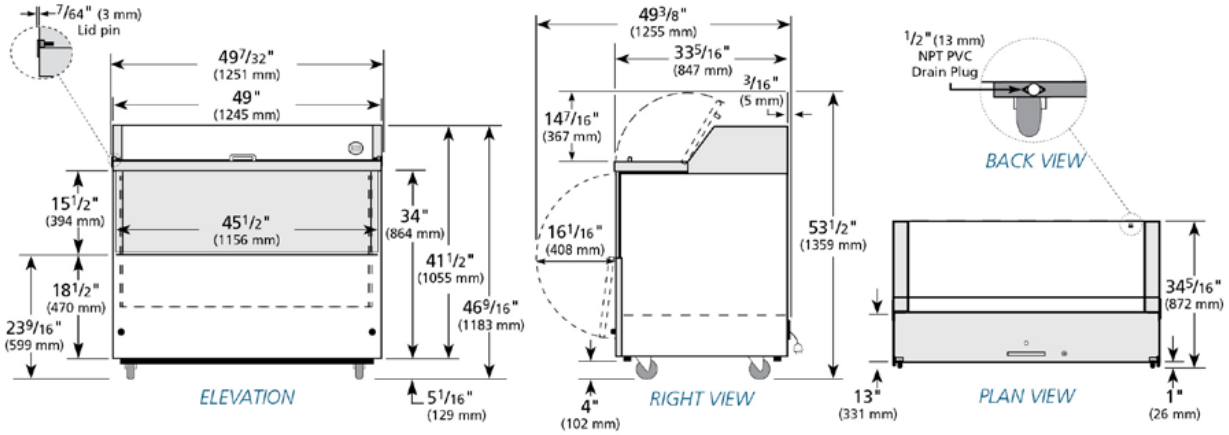


**WARRANTY***
Three year warranty on all parts and labor and an additional 2 year warranty on compressor. (U.S.A. only)

*RESIDENTIAL APPLICATIONS: TRUE assumes no liability for parts or labor coverage for component failure or other damages resulting from installation in non-commercial or residential applications.

METRIC DIMENSIONS ROUNDED UP TO THE NEAREST WHOLE MILLIMETER

SPECIFICATIONS SUBJECT TO CHANGE WITHOUT NOTICE

| Model | Elevation | Right | Plan | 3D | Back |
|---|---|---|---|---|---|
| TMC-49-SS | TFQ060E | TFQ060S | TFQ060P | TFQ0603 | |


**TRUE FOOD SERVICE EQUIPMENT**

2001 East Terra Lane • O'Fallon, Missouri 63366-4434 • (636)240-2400 • Fax (636)272-2408 • Toll Free (800)325-6152 • Intl. Fax# (001)636-272-7546 • www.truemfg.com