**TRUE FOOD SERVICE EQUIPMENT, INC.**
2001 East Terra Lane • O'Fallon, Missouri 63366
(636)240-2400 • Fax (636)272-2408 • (800)325-6152 • Intl Fax# (001)636-272-7546
Parts Dept. (800)424-TRUE • Parts Dept. Fax# (636)272-9471 • www.truemfg.com

*Project Name:* _____
*Location:* _____
*Item #:* _____ *Qty:* _____
*Model #:* _____

*AIA #*
*SIS #*

Model:
**TSSU-60-24M-B-ST**

# Food Prep Table:
*Mega-Top Solid Door Sandwich/Salad Unit*

Scan code for video

## TSSU-60-24M-B-ST

- True's salad/sandwich units are designed with enduring quality that protects your long term investment.
- Oversized, environmentally friendly (134A), patented forced-air refrigeration system holds 33°F to 41°F (.5°C to 5°C).
- Complies with and listed under ANSI/NSF-7-1997-6.3.
- All stainless steel front, top and ends. Matching aluminum finished back.
- Stainless steel, patented, foam insulated lids and hoods keep pan temperatures colder, lock in freshness and minimize condensation. Removable for easy cleaning.
- 8⅞" (226 mm) deep, ½" (13 mm) thick, full length removable cutting board included. Sanitary, high density, NSF approved white polyethylene provides tough preparation surface.
- Heavy duty PVC coated wire shelves.
- Foamed-in-place using Ecomate. A high density, polyurethane insulation that has zero ozone depletion potential (ODP) and zero global warming potential (GWP).

## ROUGH-IN DATA

Specifications subject to change without notice.
Chart dimensions rounded up to the nearest ⅛" (millimeters rounded up to next whole number).

| Model | Doors | Shelves | Pans (top) | Cabinet Dimensions (inches) (mm) L | D† | H* | HP | Voltage | Amps | NEMA Config. | Cord Length (total ft.) (total m) | Crated Weight (lbs.) (kg) |
|---|---|---|---|---|---|---|---|---|---|---|---|---|
| TSSU-60-24M-B-ST | 2 | 4 | 24 | 60⅜<br>1534 | 34⅛<br>867 | 40⅜<br>1026 | ⅓<br>⅓ | 115/60/1<br>230-240/50/1 | 7.8<br>4.2 | 5-15P<br>▲ | 7<br>2.13 | 385<br>175 |

† Depth does not include 1" (26 mm) for rear bumpers.
* Height does not include 6¼" (159 mm) for castors or 6" (153 mm) for optional legs.

▲Plug type varies by country.

MADE IN U.S.A. SINCE 1945 · 5 YEAR COMPRESSOR WARRANTY USA · c UL us · NSF · CE

8/14 Printed in U.S.A.

*APPROVALS:*

*AVAILABLE AT:*

Model:

**TSSU-60-24M-B-ST**

# Food Prep Table:
*Mega-Top Solid Door Sandwich/Salad Unit*

## STANDARD FEATURES

### DESIGN
- True's commitment to using the highest quality materials and oversized refrigeration systems provides the user with colder product temperatures, lower utility costs, exceptional food safety and the best value in today's food service marketplace.

### REFRIGERATION SYSTEM
- Factory engineered, self-contained, capillary tube system using environmentally friendly (CFC free) 134A refrigerant.
- Oversized, factory balanced refrigeration system with guided airflow to provide uniform temperature in food pans and cabinet interior.
- Patented forced-air design holds 33°F to 41°F (.5°C to 5°C) product temperature in food pans and cabinet interior. Complies with and listed under ANSI/NSF-7-1997-6.3.
- Sealed, cast iron, self-lubricating evaporator fan motor(s) and larger fan blades give True sandwich/salad units a more efficient, low velocity, high volume airflow design.
- Condensing unit access in back of cabinet, slides out for easy maintenance.

### CABINET CONSTRUCTION
- Exterior - stainless steel front, top and ends. Matching aluminum finished back.
- Interior - attractive, NSF approved, white aluminum liner. Stainless steel floor with coved corners.
- Insulation - entire cabinet structure and solid doors are foamed-in-place using Ecomate. A high density, polyurethane insulation that has zero ozone depletion potential (ODP) and zero global warming potential (GWP).
- 5" (127 mm) diameter stem castors - locks provided on front set. 36" (915 mm) work surface height.

### DOORS
- Stainless steel exterior with white aluminum liner to match cabinet interior.
- Each door fitted with 12" (305 mm) long recessed handle that is foamed-in-place with a sheet metal interlock to ensure permanent attachment.
- Positive seal self-closing doors with 90° stay open feature. Doors swing within cabinet dimensions.
- Magnetic door gaskets of one piece construction, removable without tools for ease of cleaning.

### SHELVING
- Four (4) adjustable, heavy duty PVC coated wire shelves 27½"L x 16"D (699 mm x 407 mm). Four (4) chrome plated shelf clips included per shelf.
- Shelf support pilasters made of same material as cabinet interior; shelves are adjustable on ½" (13 mm) increments.

### MODEL FEATURES
- Evaporator is epoxy coated to eliminate the potential of corrosion.
- 8⅞" (226 mm) deep, ½" (13 mm) thick, full length removable cutting board. Sanitary, high-density, NSF approved white polyethylene provides tough preparation surface.
- Stainless steel, patented, foam insulated lids and hood keep pan temperatures colder, lock in freshness and minimize condensation. Removable for easy cleaning.
- Comes standard with 24 (⅙ size) 6⅞"L x 6¼"W x 4"D (175 mm x 159 mm x 102 mm) clear polycarbonate, NSF approved, food pans in countertop prep area. Also accommodates 6" (153 mm) deep food pans (supplied by others).
- Countertop pan opening designed to fit varying size pan configurations with available pan divider bars. Varying size pans supplied by others.
- NSF-7 compliant for open food product.

### ELECTRICAL
- Unit completely pre-wired at factory and ready for final connection to a 115/60/1 phase, 15 amp dedicated outlet. Cord and plug set included.

115/60/1
NEMA-5-15R

### OPTIONAL FEATURES/ACCESSORIES
Upcharge and lead times may apply.
- ❑ 230 - 240V / 50 Hz.
- ❑ 6" (153 mm) standard legs.
- ❑ 6" (153 mm) seismic/flanged legs.
- ❑ 2½" (64 mm) diameter castors.
- ❑ Barrel locks (factory installed). Requires one per door.
- ❑ Additional shelves.
- ❑ Single overshelf.
- ❑ Double overshelf.
- ❑ Flat lids.
- ❑ Sneezeguard.
- ❑ 8⅞" (226 mm) deep, ½" (13 mm) thick, composite cutting board.
- ❑ Crumb catcher. Requires crumb catcher cutting board for proper installation.
- ❑ Pan dividers.
- ❑ Exterior rectangular digital temperature display (factory installed).
- ❑ ADA compliant model with 34" (864 mm) work surface height.
- ❑ Remote cabinets (condensing unit supplied by others; system comes standard with 404A expansion valve and requires R404A refrigerant). Consult factory technical service department for BTU information. All remote units must be hard wired during installation.

## PLAN VIEW

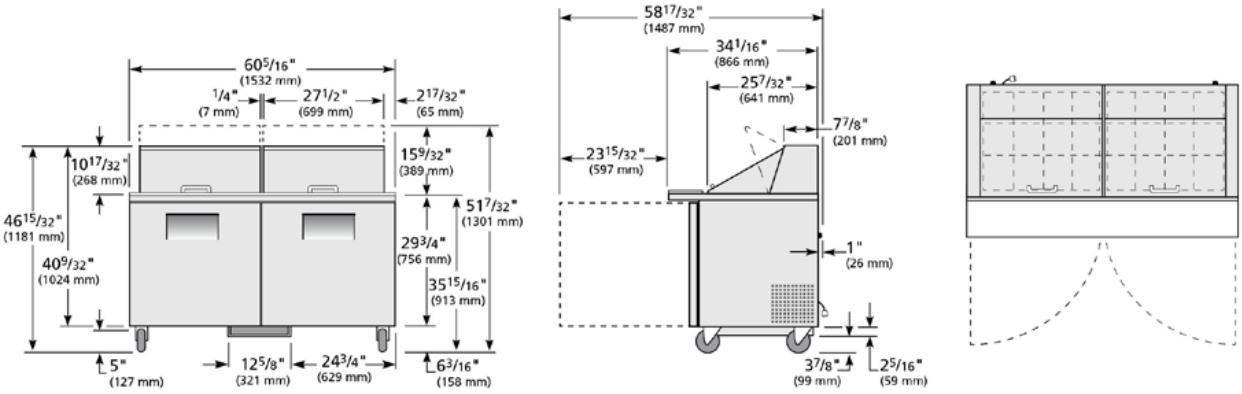


**WARRANTY***
Three year warranty on all parts and labor and an additional 2 year warranty on compressor. (U.S.A. only)

*RESIDENTIAL APPLICATIONS: TRUE assumes no liability for parts or labor coverage for component failure or other damages resulting from installation in non-commercial or residential applications.

METRIC DIMENSIONS ROUNDED UP TO THE NEAREST WHOLE MILLIMETER

SPECIFICATIONS SUBJECT TO CHANGE WITHOUT NOTICE

| Model | Elevation | Right | Plan | 3D | Back |
|---|---|---|---|---|---|
| TSSU-60-24M-B-ST | TFN045E | TFN044S | TFN045P | TFN0453 | |


**TRUE FOOD SERVICE EQUIPMENT**
2001 East Terra Lane • O'Fallon, Missouri 63366-4434 • (636)240-2400 • Fax (636)272-2408 • Toll Free (800)325-6152 • Intl. Fax# (001)636-272-7546 • www.truemfg.com