ITEM#

GLO-RAY® PORTABLE FOODWARMERS

Models GR-B, GRFF, GRFFL, GRFFB, GRFFBL

Hatco Glo-Ray Portable Foodwarmers keep food hot at kitchen work areas, waitress pickup stations or customer serving points. Available in models and sizes to meet every food warming need.

FLEXIBILITY

GR-B features a preset automatic thermostat to maintain proper base temperatures. Shipped with chrome pan rail and 6' (1829 mm) cord and plug, ready to use.

GRFF has a specially designed stand that keeps food holding pans off the work area and allows easy access from three sides. The air space between pan bottom and counter top serves as an effective insulation to prolong serving life.

GRFFB has a preset base that conducts heat from the bottom while an infrared element heats from above. A swing-away top provides fast and easy access to food pans. The GRFFB is available with a clearance of 12", 14", or 16" (305, 356, or 406 mm) between heated base and upper housing. Includes chrome pan rail and 6' (1829 mm) cord with plug.

Hatco can custom design portable foodwarmers to meet customer specifications or to fit an unusual situation. A wide selection of accessories including food pans, trivets, coated shatter-resistant incandescent lights, and controls make Glo-Ray foodwarmers ideal for any location.

QUALITY

The following features assure the finest performance for years to come:

- Models available with heat above the food, below the food, or both.
- All models are factory pre-wired with a 6' (1829 mm) cord and plug.
- Optional incandescent lights available to enhance food appeal.

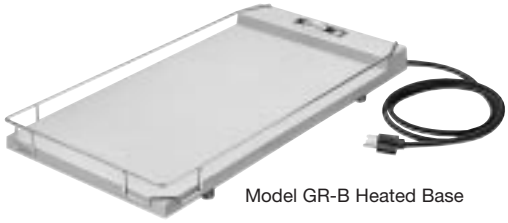

Model GR-B Heated Base

Model GRFFBL with optional infinite control and accessory half-size food pans and wire trivets

Model GRFFL with optional 9"W x 5½"H (229 x 140 mm) display sign holder (sign not included), *Designer* color and accessory food pan

METAL SHEATHED HEATING ELEMENTS GUARANTEED AGAINST BURNOUT AND BREAKAGE FOR TWO YEARS,

HATCO CORPORATION P.O. Box 340500 Milwaukee, WI 53234-0500 U.S.A.
(800) 558-0607 • (414) 671-6350 • Fax (800) 543-7521 • Int'l. Fax (414) 671-3976
www.hatcocorp.com • E-mail: equipsales@hatcocorp.com

Form No. GRFF-1005(S) Printed in U.S.A.

ITEM#

GLO-RAY® PORTABLE FOODWARMERS

Models GR-B, GRFF, GRFFL, GRFFB, GRFFBL

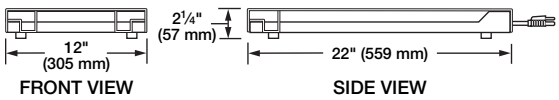

Model GR-B

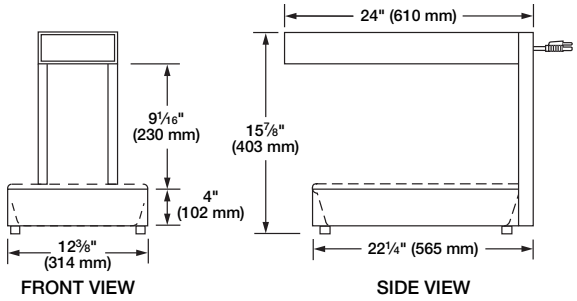

Model GRFF

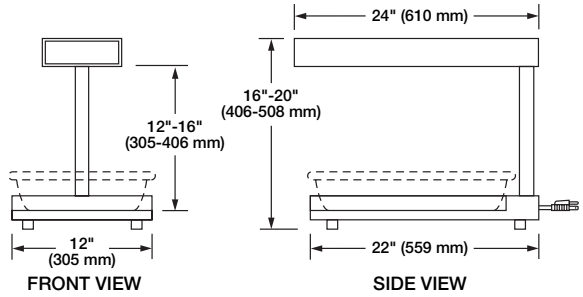

Model GRFFB

SPECIFICATIONS

Metal Sheathed Elements

Model	Watts	Amps	Shipping Weight
GR-B	250	2.1	16 lbs. (7 kg)
GRFF	500	4.2	16 lbs. (7 kg)
GRFFL★	620	5.2	18 lbs. (8 kg)
GRFFB§	750	6.3	26 lbs. (12 kg)
GRFFBL★§	870	7.3	31 lbs. (14 kg)

★ "L" added to model number indicates incandescent light (add 3" (76 mm) to width of upper housing).

§ Specify clearance of 12", 14", or 16" (305, 356, or 406 mm) when ordering.

DIMENSIONS

GR-B: 12"W x 22"D x 2¼"H (305 x 559 x 57 mm)
GRFF: 12⅜"W x 24"D x 15⅞"H (314 x 610 x 403 mm)
GRFFB: 12"W x 24"D x 16"-20"H (305 x 610 x 406-508 mm)

VOLTAGE

120 volts, single phase (uses NEMA 5-15P).
Export voltages available.

CORD LOCATION

GR-B, GRFFB, GRFFBL: Bottom back.
GRFF, GRFFL: Back of unit at top.

PLUG CONFIGURATIONS

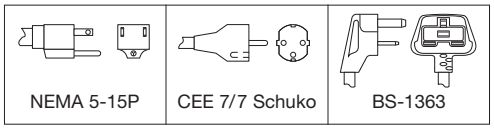

OPTIONS (NOT FOR RETROFIT)

- ❑ *Designer* Colors: (One color per unit, heated base is not powdercoated) Warm Red, Black, Gray Granite, White Granite, Navy Blue, Hunter Green
- ❑ 9"W x 5½"H (229 x 140 mm) Display Sign Holder (Sign not included) (GRFFL model only) adds 3" (76 mm) to height of unit
- ❑ Infinite Control*
- ❑ Halogen Bulb in lieu of Standard Display Light

* Not available on model GR-B or units with sign holder.

ACCESSORIES

- ❑ 5 Pleat Hardcoated French Fry Box Ribbon
- ❑ 8 Pleat Hardcoated French Fry Bag Ribbon
- ❑ Food Holding Pans
- ❑ Wire Trivets

PRODUCT SPECS

Portable Foodwarmer

The Portable Foodwarmer shall be a Glo-Ray®, manufactured by the Hatco Corporation, Milwaukee, WI 53234 U.S.A.

The Foodwarmer shall be a Glo-Ray Model ...., rated at ....watts, ...volts, single phase and be ....inches (millimeters) in overall width.

The Glo-Ray shall consist of aluminum housing and include an infrared heating element that shall be tubular metal sheathed. Accessories shall include food holding pans, trivets, and ribbons.

HATCO CORPORATION P.O. Box 340500 Milwaukee, WI 53234-0500 U.S.A. • (800) 558-0607 • (414) 671-6350
Fax (800) 543-7521 • Int'l. Fax (414) 671-3976 • www.hatcocorp.com • E-mail: equipsales@hatcocorp.com

Form No. GRFF-1005(S)

Printed in U.S.A.