CRMF27/48

Commercial Series Undercounter Freezers

CRMF27/48
8/12
Item # 13287

Hoshizaki America, Inc. reserves the right to change specifications without notice.

Item #

Project:

Qty:

*AutoCad available on KCL

NSF c UL US LISTED

ISO9001 · ISO14001

- Stainless steel exterior front, sides and top
- Anodized Aluminum interior sides and back with stainless steel interior floor
- Stainless steel exterior door with ABS interior liner
- Cabinet and doors are insulated with 2" of CFC free, foamed in place polyurethane
- Exclusive "stepped" door design to protect door gasket
- Spring assisted self-closing doors with stay open feature
- Extruded aluminum flush mount door handle
- Field reversible doors (without kit)
- Magnetic door gasket is easily removable for cleaning
- Enamel coated evaporator coil
- Automatic defrost
- One (1) epoxy coated shelf per section is standard
- Anodized aluminum shelf supports adjustable in ½" increments
- Standard with 4" stem casters (two with brakes)
- Two years parts and labor warranty
- Five year compressor warranty
- 8 ft. cord and plug

* CRMF27 is ENERGY STAR qualified

Dimensions / Capacity

Model #	One Section CRMF27	Two Section CRMF48
Nominal Storage Capacity (CF)	7.2 ft^3	13.66 ft^3
Interior Storage Capacity (CF) (AHAM)	6.22 ft^3	11.95 ft^3
Overall Width x Depth	27" x 30"	48" x 30"
Height (including 4" casters)	33.63"	33.63"
Door Opening Width x Height	22.6" x 22.9"	19.5" x 22.9"
Depth with Door open at 90°	54.5"	51.5"
Adjustable Shelves	1	2
Shelf Dimensions (W x D)	22.0" x 16.0"	21.3" x 16.0"
Crated Shipping Weight	160 lbs	238 lbs
Crated Height x Width x Depth	36.5" x 31.5" x 34"	36.5" x 52.5" x 34"

Electrical / Refrigeration Data

Model #	One Section CRMF27	Two Section CRMF48
Amperage	3.4	6.0
Energy Consumption (kwh/day) **ENERGY STAR**	2.66	4.34
Heat Rejection (BTU/Hr.) @NSF	442	820
Approx. Nominal Compres. BTU/HR(HP)	841(1/5HP)	1527(1/3HP)

CRMF Dimensions W x D x H

1 Section - 27" x 30" x 33.63"*

2 Section - 48" x 30" x 33.63"*

*with 4" casters

Electrical/Refrigeration

Voltage 115/60/1

HACR Breaker 15.0

Electrical Connection (NEMA)
1 & 2 Section - 5-15P

Voltage Range 104 - 126

Ambient Temp. Range 45°- 100°F

Control Setpoint Range -18°- +10°F

***Refrigerant** R-134A

Warranty

Valid in United States, Canada, Puerto Rico, and U.S. Territories. Contact factory for warranty in other countries.

- **Two Year** - Parts & Labor on entire machine.
- **Five Year** - Parts on: Compressor.

Options

- 2.25" Casters
- 6" Casters
- Additional epoxy shelves

© HOSHIZAKI AMERICA, INC.

618 Hwy. 74 S., Peachtree City, GA 30269
TEL 800-438-6087
FAX 800-345-1325
www.hoshizaki.com

CRMF27/48

Commercial Series Undercounter Freezers

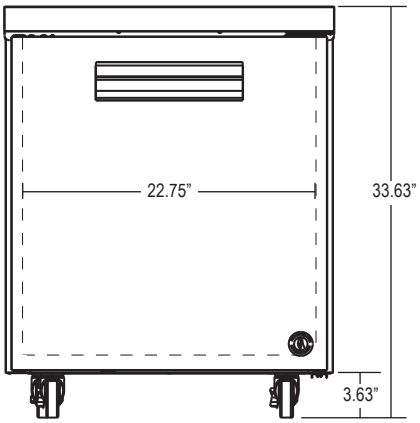

CRMF27
FRONT

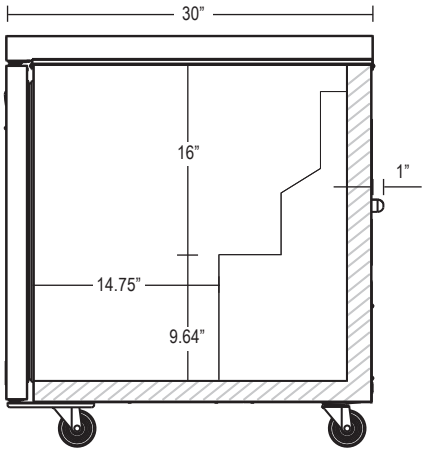

SIDE
(Cross Section)

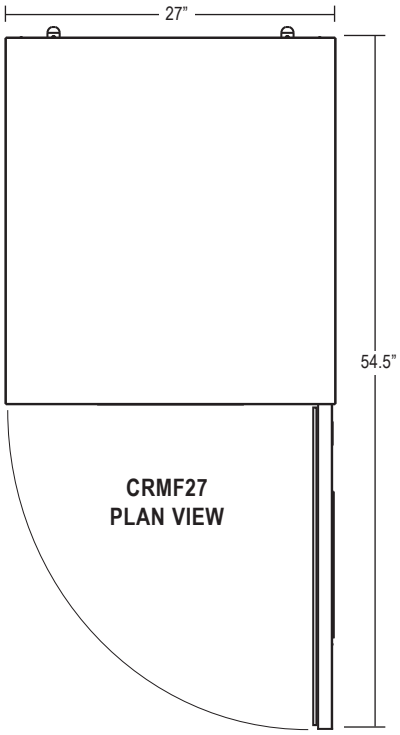

CRMF27
PLAN VIEW

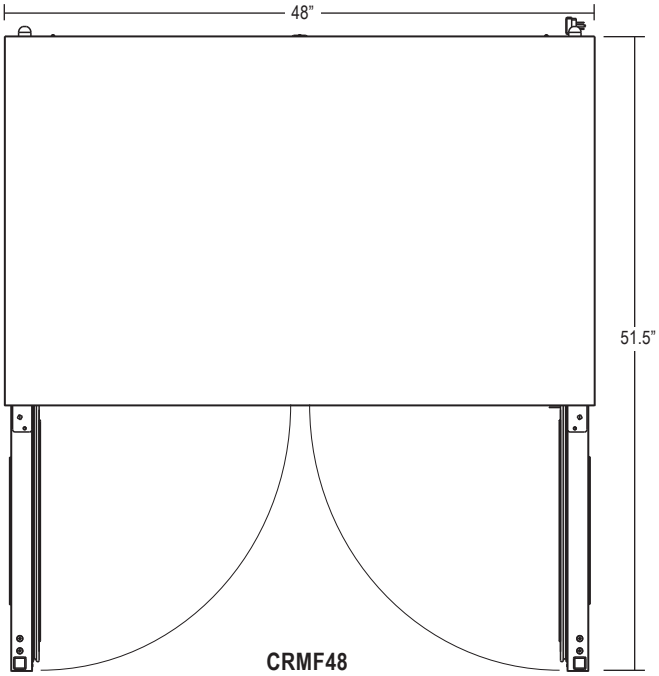

CRMF48
PLAN VIEW

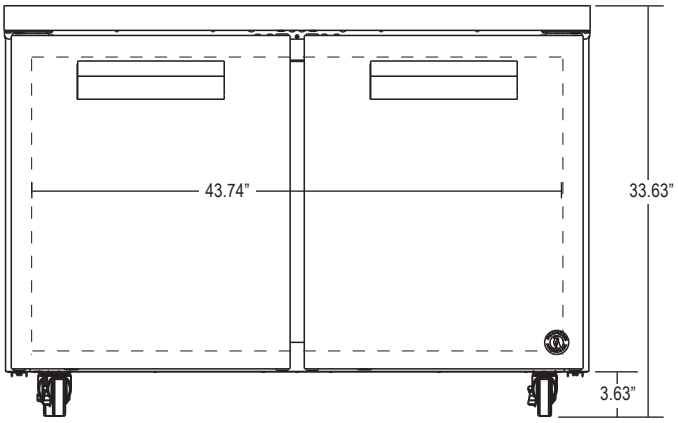

CRMF48
FRONT

Cabinet Construction

The exterior cabinet top, front, and sides, are constructed of high quality stainless steel. The exterior back and bottom are constructed of coated steel. The cabinet interior back and sides are anodized aluminum with a stainless steel floor. Heavy duty epoxy coated installed shelves are standard. Mounted on anodized aluminum pilasters the shelf is adjustable in ½" increments. Cabinet walls and doors are insulated with 2" of environmentally friendly, CFC free, foamed in place polyurethane. Perimeter door heater prevents condensation from forming on the face of the cabinet. 4" polyolefin, stem casters (two with brakes) are standard.

Door Construction

Doors are constructed of high grade stainless steel exterior with an ABS interior liner. Hoshizaki's exclusive "stepped" design protects the gasket while product is removed from the cabinet. Doors are provided with a one piece, extruded aluminum, flush mount handle. Spring assisted self-closing doors are equipped with a stay open feature past 90 degrees. Snap-in magnetic door gaskets are durable and easily removed for cleaning. Field reversible door hinging is standard.

Refrigeration System

The high efficiency refrigeration system is self-contained with an enamel coated evaporator for extended life. Condensate removal is accomplished with an energy efficient non-electric evaporation system. A capillary tube controls the flow of environmentally friendly R-134A refrigerant through the evaporator. Unit is provided with an automatic electric defrost to remove any ice on the evaporator coil. 115 volt units are equipped with an eight foot cord and plug (20.0 amps or less).

© HOSHIZAKI AMERICA, INC.

618 Hwy. 74 S., Peachtree City, GA 30269 • TEL 800-438-6087 • FAX 800-345-1325 • www.hoshizaki.com

ENERGY STAR NSF c UL us LISTED

ISO9001-ISO14001